BOSCH

文件编号：0 369 EA 6 901C-02

ESP9 系统下线检测规程

ESP9 System End of Line Test Instruction

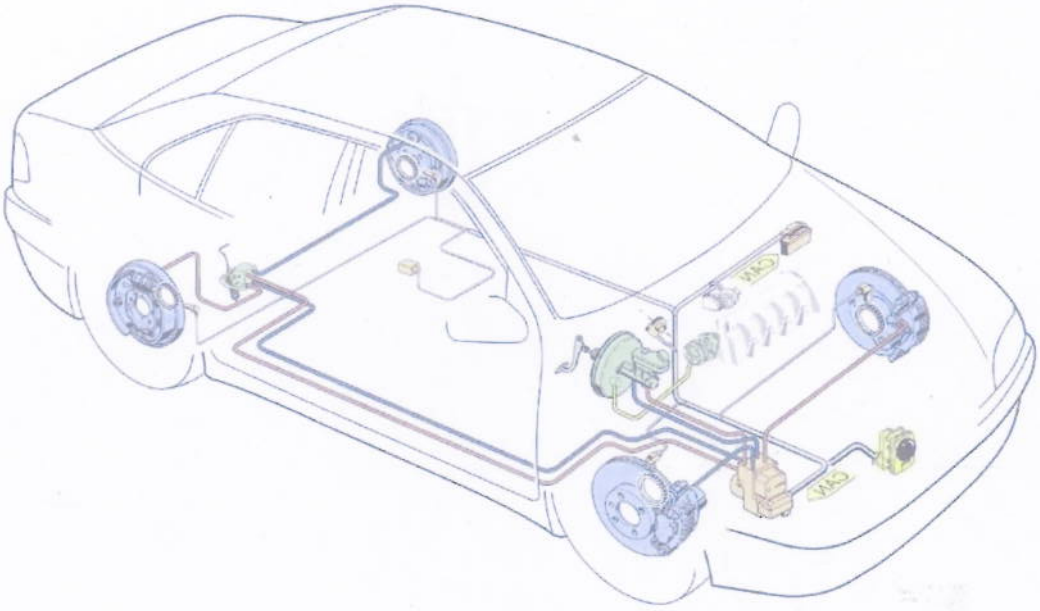

Edited by: Zhu Qinwen 2013.6.

Checked by: Wang Paul 2013.6.

Approved by: 2013.6.9

©博世保留商标和专利应用在内的所有权力，未经我公司许可不得复制或传递给第三方。

© All rights with Robert Bosch GmbH, including trademark / patent applications. Any right of disposal, as copying and distribution to third parties is ours.

修改记录 Modifications:

Ver.	Date	Chapter	Description of changes	Signature
00	27.08.2012	All	New edition	Zhu Qinwen
01	27.04.2013	章节 3.3 章节 4.12，4.13	增加踏板传感器标定 Add Pedal travel sensor calibration	Zhu Qinwen
02	2013.06.04	章节 3.4 章节 4.14，4.15	增加胎压复位说明 Add iTPMS reset description	Zhu Qinwen

©博世保留商标和专利应用在内的所有权力，未经我公司许可不得复制或传递给第三方。

© All rights with Robert Bosch GmbH, including trademark / patent applications. Any right of disposal, as copying and distribution to third parties is ours.

目录 Table of Content:

1 综述 General 4

1.1 应用 Application 4
1.2 首字母缩写 Acronyms 4

2 操作次序 Operate sequence description 5

3 下线检测过程步骤描述 EOL Process Step Description 7

3.1 偏航率传感器标定 YRS sensor Calibration 8
3.2 转向角传感器标定 Steering Angle Sensor Calibration 11
3.3 踏板行程传感器标定（可选） PTS Calibration （Optional） 12
3.4 胎压复位（可选） iTPMS reset （Optional） 12
3.5 轮速传感器测试（转毂驱动） Wheel Speed Sensor Test (rolls with external drive) 13
3.6 ESP 动态测试 ESP dynamic test 19

4 诊断功能 Diagnosis Function 30

4.1 建立扩展诊断模式 Start Extended Diagnostic Session 30
4.2 电子控制单元识别 ECU-Identification 31
4.3 读取抽真空加注过程字节 Read E&F Process Byte 33
4.4 写入变量代码（可选）Write Variant Code (Optional) 34
4.5 读取故障代码 Read Status Of DTC 35
4.6 清除故障代码 Clear DTC 36
4.7 偏航率速度传感器标定（可选） YRS sensor Calibration（Optional） 37
4.8 检查偏航率传感器标定结果（可选） Check YRS calibration result（Optional） 37
4.9 读取偏航率传感器信号（可选） Read YRS sensor signal（Optional） 38
4.10 方向盘转角传感器标定（可选） Steering Angle sensor Calibration（Optional） 39
4.11 转向角传感器标定结果（可选） Check SAS calibration result（Optional） 40
4.12 踏板行程传感器标定（可选） Pedal travel sensor Calibration（Optional） 40
4.13 踏板行程传感器标定结果（可选） Check PTS calibration result （Optional） 41
4.14 胎压复位（可选） iTPMS reset （Optional） 42
4.15 检查胎压复位状态（可选） Request iTPMS reset result（Optional） 42
4.16 禁用速度限制和阀组继电器关闭 Speed limit and Valve relay shut down deactivation 43
4.17 开始轮速传感器测试 Start WSS Test 44
4.18 评估轮速传感器测试 Evaluation of WSS Test 45
4.19 ESP 动态测试 ESP Dynamic Test 46
4.20 写入下线检测过程控制字节 Write EOL Test Process Control Byte 47
4.21 激活速度限制和阀组继电器关闭 Speed limit and Valve relay shut down activation 47
4.22 进入安全模式 Security Access 48
4.23 结束扩展诊断模式 End of Extended Diagnosis Session 49

5 阀保护措施和液压数据 Valve protective measures and hydraulic data 50

6 设备要求 Equipment Requirement 53

©博世保留商标和专利应用在内的所有权力，未经我公司许可不得复制或传递给第三方。

© All rights with Robert Bosch GmbH, including trademark / patent applications. Any right of disposal, as copying and distribution to third parties is ours.

1 综述 General

1.1 应用 Application

本文档适用于指导在线操作和设备开发。

This document is used as a guideline of operating online and preparing equipment.

1.2 首字母缩写 Acronyms

ABS	防抱死制动系统 antilock braking system
ABS-SILA	防抱死制动系统警告灯 ABS warning light
AV	防抱死制动系统的出液阀 ABS outlet valve
AX/AY	纵向/横向加速度传感器 acceleration sensor
BLS	刹车灯开关 break light switch
DTC	诊断故障码 diagnostic trouble code
ECU	电子控制单元 electronic control unit
ESP	电子稳定程序 electronic stability program
EV	防抱死制动系统进液阀 ABS inlet valve
FA	前轴 front axle
FCM	故障码存储器 fault code memory
FL	左前 front left
FR	右前 front right
HSV	高压阀 prime valve (ASV)
IIS	集成传感器 Integrated Inertial Sensor
LWS (SAS)	方向盘转角传感器 (SAS)steering angle sensor
PB	过程字节 process byte
PS	压力传感器 pressure sensor
RA	后轴 rear axle
RFP	循环电机泵 recirculation pump
RL	左后 rear left
RR	右后 rear right
SV	电磁阀 solenoid valve
UM	电机泵反馈 pump motor feedback
USV	导向阀 Pilot valve
WSS	轮速传感器 wheel speed sensor
YRS	偏航率传感器 yaw rate sensor
PTS	踏板行程传感器 Pedal Travel Sensor
iTPMS	智能胎压监测系统（基于周长）intelligent Tire Pressure Monitoring system (Circumference based)

©博世保留商标和专利应用在内的所有权力，未经我公司许可不得复制或传递给第三方。

© All rights with Robert Bosch GmbH, including trademark / patent applications. Any right of disposal, as copying and distribution to third parties is ours.

2 操作次序 Operate sequence description

诊断步骤 Diagnostic Step	诊断功能 Diagnostic function	参考章节 Details chapter
01	建立通讯（扩展模式） Start communication (Extended Diagnostic Session)	**4.1**
02	车辆信息识别 ECU Identification	**4.2**
03	写入变量代码（可选） Write Variant Code （optional）	**4.4**
04	偏航率传感器标定（可选） YRS Calibration（optional）	**4.7**
05	检查偏航率传感器标定结果 （可选） Check YRS calibration result（optional）	**4.8**
06	读取偏航率传感器信号（可选） Read YRS signal（optional）	**4.9**
07	转向角传感器标定（可选） Steering Angle Sensor Calibration （optional）	**4.10**
08	检查转向角传感器标定结果（可选） Check Steering Angle Sensor Calibration（optional）	**4.11**
09	踏板行程传感器标定（可选） Pedal Travel Sensor Calibration （optional）	**4.1.2**
10	检查行程传感器标定结果（可选） Check Pedal travel sensor Calibration（optional）	**4.1.3**
11	胎压复位 （可选） iTPMS reset （optional）	**4.14**
12	检查胎压复位结果 （可选） Check iTPMS reset result （optional）	**4.15**
13	读取故障代码 Read DTC	**4.5**
14	检查抽真空加注过程字节 Check E&F Process Byte	**4.3**
15	检查系统状态（阀组与电机状态） Check system status(VR & MR status)	**4.2**
16	禁用“速度限制和阀组继电器关闭” “Speed limited and Valve relay shut down” deactivation	**4.16**
17	轮速传感器测试 WSS Test	**4.17**
18	评估轮速传感器测试结果 Evaluation WSS Test Result	**4.18**
19	动态测试 Dynamic Test	**4.19**
20	检查系统状态（阀组与电机状态） Check system status(VR & MR status)	**4.2**
21	写入下线检测过程字节 Write EOL Process Byte	**4.20**

©博世保留商标和专利应用在内的所有权力，未经我公司许可不得复制或传递给第三方。

© All rights with Robert Bosch GmbH, including trademark / patent applications. Any right of disposal, as copying and distribution to third parties is ours.

22	读取故障代码 Read DTC	**4.5**
23	清除故障代码 Clear DTC	**4.6**
24	激活“速度限制和阀组继电器关闭 ” “Speed limited and Valve relay shut down” activation	**4.21**
25	结束诊断 End of diagnostics	**4.23**

©博世保留商标和专利应用在内的所有权力，未经我公司许可不得复制或传递给第三方。

© All rights with Robert Bosch GmbH, including trademark / patent applications. Any right of disposal, as copying and distribution to third parties is ours.

3 下线检测过程步骤描述 EOL Process Step Description

所有的博世 ESP 系统部件，如电子控制单元，液压调节模块，轮速传感器，在运输到客户装配生产厂前都单独在博世装配线上检测过。
对于系统整体来说，包括车身线路，仪表指示灯以及供电，这些第一次在工厂组装至车身的部件，也 必须检测其正常连接和功能。
ECU 可以运行很多复杂的自我监控特性软件（如连续性和验证检查），监测到错误时读出故障并且存储故障数量。这个特征使用在下线检测过程中，通过这个特性读取故障码数量，作为维修服务的信息。但是，一些故障不能通过 ECU 自身检测出来（如液压管路或者轮速传感器交错连接，和一些输入信号的正确性，如制动灯开关）。
为了找出这些故障，车辆在等待或者动态台架上时，应该进行静态测试或动态测试：
- 所有电子控制单元的输入输出信号功能是否正确
- 所有轮速传感器的功能是否正确（信号质量和相关性）
- 所有阀和液压部件的功能是否正确（功能和相关性）
- 传感器标定

All The Bosch ESP components, such as ECU, hydraulic modulator, wheel speed sensors, are checked individually in the Bosch assembly line prior to shipment to the customers assembly plants.
The entire system including harnesses, dashboard lights and power supply of the vehicle is assembled the first time at the customer plant and must be checked for proper connections and functions.
The ECU is capable to run a number of complexity self monitoring software features, such as continuity and plausibility checks and in case of errors to identify these faults and to store fault code numbers.
This feature is used at the end of line test by reading out the fault codes as error identification as well as information for repair works.
However, some of the failures can not be detected by the ECU itself (such as cross connections of hydraulic pipes or wheel speed sensors and correct functioning of some input signals, i.e. brake light switch). In order to find these failures static or dynamic tests should be performed while the vehicle is at rest or during a dynamic test on a dynamometer.
The major items of this test steps is to check for:
- correct functioning of all input and output signals of the ECU
- correct functioning of all wheel speed sensors (signal quality and correlation)
- correct functioning of all valves and hydraulic components (functioning and correlation)
- calibration of sensors

©博世保留商标和专利应用在内的所有权力，未经我公司许可不得复制或传递给第三方。

© All rights with Robert Bosch GmbH, including trademark / patent applications. Any right of disposal, as copying and distribution to third parties is ours.

3.1 偏航率传感器标定 YRS sensor Calibration

偏航率传感器有集成式传感器（IIS）和外置式传感器，集成式传感器要求 ESP 安装的水平度不能超过±5°。
Two types of YAR: integrated inertial sensor (IIS) and external YAW rate sensor, the integrated inertial sensor type required that the ESP should be installed horizontally and the maximum allowed inclination angle is ±5°.

偏航率传感器标定流程

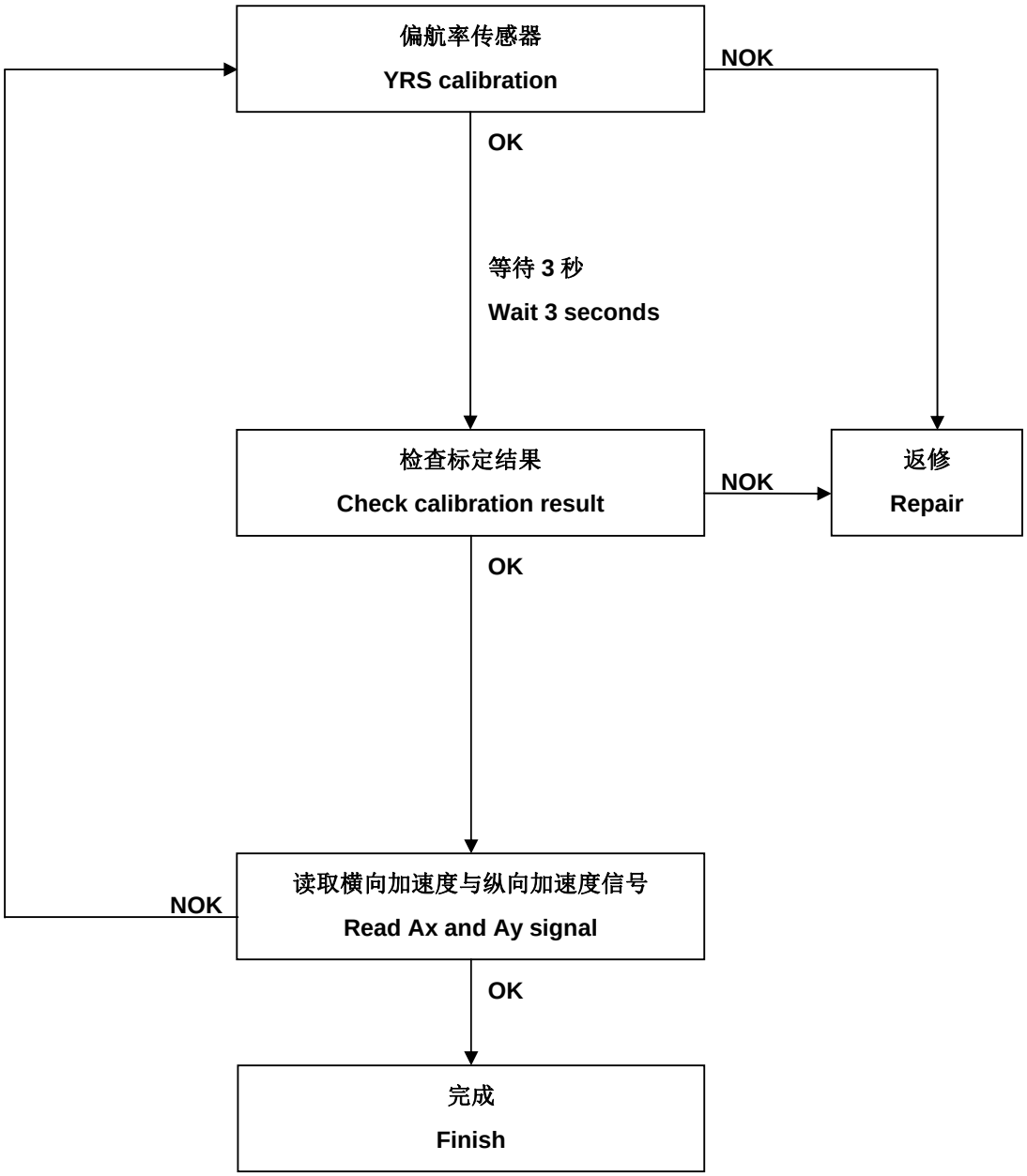

©博世保留商标和专利应用在内的所有权力，未经我公司许可不得复制或传递给第三方。

© All rights with Robert Bosch GmbH, including trademark / patent applications. Any right of disposal, as copying and distribution to third parties is ours.

偏航率传感器标定 YRS sensor Calibration	
Operator: 操作者	Test rig / Tester: 试验台/测试设备
☞ 将方向盘转至正前方位置 Turn steering wheel to straight ahead position 车辆在测试设备上应处于直行位置 Car should be positioned straight ahead on the equipment	💻 偏航率传感器偏移量 Calibration of YRS sensor offset values

传感器偏移标定的前提条件 Conditions during sensor offset calibration:

• 试验台最大倾斜角必须在允许范围内（在两个对正方向上都必须满足，具体请参考下方图表）Maximum allowed inclination angle of the test rig ± 0,57° (±1%) (both alignment directions, for details look in the diagrams below)
• 试验台必须静止（即不在生产线上）Test rig must be stationary (i.e. not on production line)
• 方向盘转至正前方位置 Steering wheel in straight ahead position
• 胎压正确 Correct tire pressure
• 正常负载状况 Normal loading condition
• 允许车辆油箱低容积（生产中加注燃料）Low capacity of the vehicle tank
• 车辆由自身车轮支撑 Car standing on its wheels
• 仅司机一人必须坐于车内 Only the driver should be sitting in the car
• 不允许有额外的如关车门或关发动机罩等干扰 No additional disturbances such as closing the door or closing the engine hood are allowed

博世推荐标定在动态检测之前进行，可以在平坦的区域如四轮定位上进行。
The calibration may be done on a suitable flat area like alignment rest rig before dynamic test.

备注 Remarks:

交货状态的ESP，其 EEPROM已经存有预先确定的偏移量。在标定的过程中ECU会将测得的新数据写入EEPROM并供ESP使用。ESP不能确认上面提到的前提条件，所以客户必须确保上述标定条件成立。如果偏移量过大，则系统会拒绝标定，此时需将车辆进行返修。更换ESP9必须进行YRS标定。

The ESP ECU is delivered to the customer with predefined Ax and Ay offset values in the EEPROM.
The values show that the sensor is not yet calibrated. During the calibration procedure, the ECU writes the measured values of the Ax and Ay sensor offsets into the EEPROM. From now on, the ECU uses the values stored in the EEPROM to correct measured accelerations for the offset in the sensor. It is not possible for the ECU to check whether the calibration conditions described above have been met, so the customer must guarantee the correct conditions during calibration of the sensor in the plant. If the measured calibration offset is too large, the ECU will reject the calibration. The ECU will also reject the calibration if, during the calibration, the spread (difference) in measured values over the time of the test (t = 1s) is too large. If the ESPI ECU is changed in the rework area, a new calibration must be executed. This procedure is also valid for service and workshops at the dealer.

©博世保留商标和专利应用在内的所有权力，未经我公司许可不得复制或传递给第三方。

© All rights with Robert Bosch GmbH, including trademark / patent applications. Any right of disposal, as copying and distribution to third parties is ours.

汽车侧视图（YRS 标定）**Side view of the vehicle (YRS calibration):**

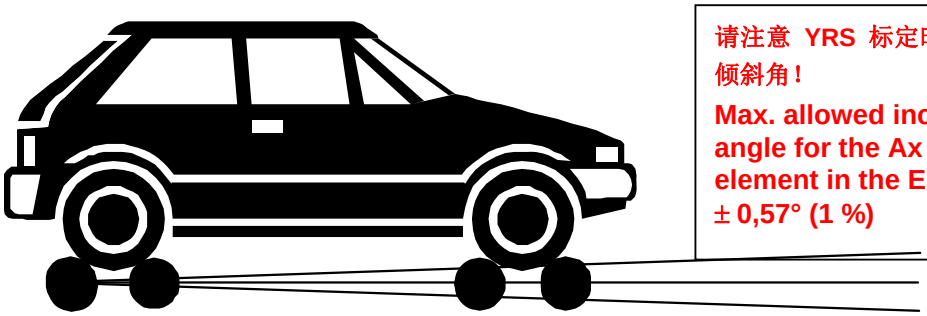

请注意 YRS 标定时的最大允许倾斜角！

Max. allowed inclination angle for the Ax sensor element in the ESP9i ECU: ± 0,57° (1 %)

汽车前视图（YRS 标定）**Front view of the vehicle (YRS calibration):**

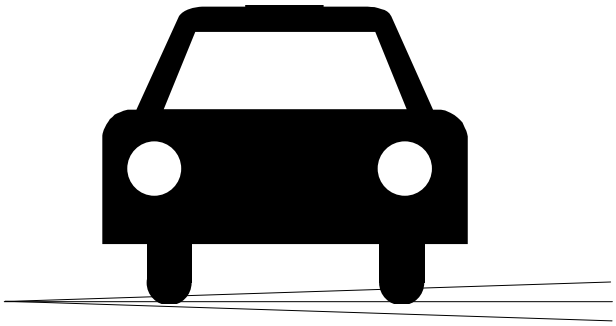

请注意 YRS 标定时的最大允许倾斜角！

Max. allowed inclination angle for the Ay sensor element in the ESP9i ECU: ± 0,57° (1 %)

YRS 标定成功 ⇒ 继续下线检测流程
YRS 标定不成功 ⇒ 退出，打印错误信息并将车辆送至维修区
YRS calibration successful ⇒ Continue
YRS calibration not successful ⇒ Abort, print out fault message and send vehicle to repair area

©博世保留商标和专利应用在内的所有权力，未经我公司许可不得复制或传递给第三方。

© All rights with Robert Bosch GmbH, including trademark / patent applications. Any right of disposal, as copying and distribution to third parties is ours.

3.2 转向角传感器标定 Steering Angle Sensor Calibration

转向角传感器标定**Steering Angle Sensor Calibration**	
操作员 Operator:	设备 Test Rig:
将转向轮旋转至直线位置 转向角位置要求 -5° < 直线 < 5° Turn Steering wheel into straight position Steering angle position -5° < straight < 5°	标定位置 Calibration of the neutral position

备注：
在标定转向角传感器时转向轮的位置必须保证成直线。
最大允许误差为 ± 5°。
错误的标定将导致故障码存储器内产生一个故障码，验证一个不正确的标定必需再次点火，也只有在下一次点火循环后方可进行再标定。

Remarks:
The Steering wheel position for the calibration of the steering angle sensor must be in a straight position.
The maximum allowed tolerance for the calibration amounts ± 5°.
An incorrect calibration will set a fault code in the fault code memory.
To verify a NOK calibration it is necessary to make an ignition cycle. The calibration will be initiated after the next ignition cycle.

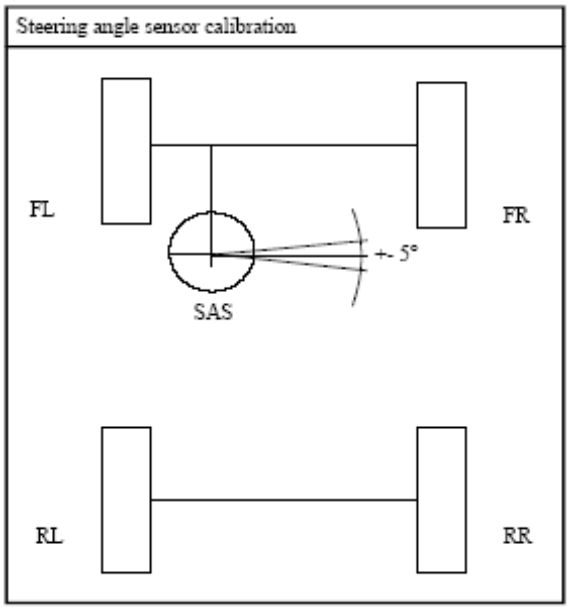

标定数据不正确 · 错误信息，继续
标定数据正确 · 继续
Calibration data incorrect □ Failure message, continue
Calibration data correct □ Continue

特殊备注：
转向角传感器必须进行标定！！！
博世推荐标定在动态检测之前进行，可以在平坦的区域如四轮定位上进行。

Specific Remarks:
The steering angle sensor calibration is a must!!!
The calibration may be done on a suitable flat area like alignment rest rig before dynamic test.

©博世保留商标和专利应用在内的所有权力，未经我公司许可不得复制或传递给第三方。

© All rights with Robert Bosch GmbH, including trademark / patent applications. Any right of disposal, as copying and distribution to third parties is ours.

3.3 踏板行程传感器标定（可选） PTS Calibration （Optional）

踏板行程传感器标定 PTS Calibration	
Operator: 操作者	Test rig / Tester: 试验台/测试设备
☞ 车辆处于相对静止状态； Keep vehicle static; 刹车踏板处于自由悬空位置 Brake pedal stay static and no apply	💻 标定踏板行程传感器偏移量 Calibration of PTS offset values

PTS 标定成功 ⇒ 继续下线检测流程
PTS 标定不成功 ⇒ 退出，打印错误信息并将车辆送至维修区
PTS calibration successful ⇒ Continue
PTS calibration not successful ⇒ Abort, print out fault message and send vehicle to repair area

3.4 胎压复位（可选） iTPMS reset （Optional）

胎压复位 iTPMS reset	
Operator: 操作者	Test rig / Tester: 试验台/测试设备
☞ 车辆上电 3s 后； After 3s of vehicle ignition ON; 车轮车速小于 3.6km/h； Vehicle speed no more than 3.6km/h	💻 胎压复位 Reset for iTPMS

胎压重置成功 ⇒ 继续下线检测流程
胎压重置不成功 ⇒ 退出，打印错误信息并将车辆送至维修区
iTPMS reset successful ⇒ Continue
iTPMS reset not successful ⇒ Abort, print out fault message and send vehicle to repair area

©博世保留商标和专利应用在内的所有权力，未经我公司许可不得复制或传递给第三方。

© All rights with Robert Bosch GmbH, including trademark / patent applications. Any right of disposal, as copying and distribution to third parties is ours.

3.5 轮速传感器测试（转毂驱动） Wheel Speed Sensor Test (rolls with external drive)

本文件描述了两种方式进行传感器的相关性测试：
方式 1. 转毂顺序转动（同速不同时）
方式 2. 转毂各自以不同速度转动，可以减少时间但需要转毂支持（同时不同速）
This document described two versions for the wheel speed sensor test corresponding of the exist test bench.
One kind of wheel speed sensor should be used.
Version 1: All roller pairs will be actuate one after the other.
Version 2: The second solution allows a shorter process time but a test bench is needed with the ability to drive the roller pairs together with different speed values.

如果测试速度超过 10km/h，则需关闭速度限制。
the speed limit must be deactivated if speed increase to more than 10 Km/h.

3.5.1 方式 1： Version 1:

轮速传感器测试（相关性和信号质量检测；方式一） Wheel speed sensor test (correlation and signal quality check; Version 1)					
Test bench:			ECU data:		Requested data:
Roll front left Roll front right Roll rear left Roll rear right	On; 5 km/h Off; 0 km/h Off; 0 km/h Off; 0 km/h		Wheel FL: min/max Wheel FR: min/max Wheel RL: min/max Wheel RR: min/max	xx km/h xx km/h xx km/h xx km/h	4,5 km/h < xx < 5,5 km/h 0,0 km/h < xx < 1,0 km/h 0,0 km/h < xx < 1,0 km/h 0,0 km/h < xx < 1,0 km/h
Roll front left Roll front right Roll rear left Roll rear right	On; 5 km/h On; 5 km/h Off; 0 km/h Off; 0 km/h		Wheel FL: min/max Wheel FR: min/max Wheel RL: min/max Wheel RR: min/max	xx km/h xx km/h xx km/h xx km/h	4,5 km/h < xx < 5,5 km/h 4,5 km/h < xx < 5,5 km/h 0,0 km/h < xx < 1,0 km/h 0,0 km/h < xx < 1,0 km/h
Roll front left Roll front right Roll rear left Roll rear right	On; 5 km/h On; 5 km/h On; 5 km/h Off; 0 km/h		Wheel FL: min/max Wheel FR: min/max Wheel RL: min/max Wheel RR: min/max	xx km/h xx km/h xx km/h xx km/h	4,5 km/h < xx < 5,5 km/h 4,5 km/h < xx < 5,5 km/h 4,5 km/h < xx < 5,5 km/h 0,0 km/h < xx < 1,0 km/h
Roll front left Roll front right Roll rear left Roll rear right	On; 5 km/h On; 5 km/h On; 5 km/h On; 5 km/h		Wheel FL: min/max Wheel FR: min/max Wheel RL: min/max Wheel RR: min/max	xx km/h xx km/h xx km/h xx km/h	4,5 km/h < xx < 5,5 km/h 4,5 km/h < xx < 5,5 km/h 4,5 km/h < xx < 5,5 km/h 4,5 km/h < xx < 5,5 km/h
Roll front left Roll front right Roll rear left Roll rear right	On; 5 km/h On; 5 km/h On; 5 km/h On; 5 km/h		Wheel FL: min/max Wheel FR: min/max Wheel RL: min/max Wheel RR: min/max	xx km/h xx km/h xx km/h xx km/h	4,5 km/h < xx < 5,5 km/h 4,5 km/h < xx < 5,5 km/h 4,5 km/h < xx < 5,5 km/h 4,5 km/h < xx < 5,5 km/h

备注：
这里所列的数据值仅供参考，最终数据值需制造商通过试验来确定。
为了检测传感器的相关性（连接传感器与相应的车轮），测试设备逐一地带动各个车轮。测试速度必须匹配测力计设计（如测试速度为5千米/小时）。
测试设备记录了来自电子控制单元的轮速数据并验证这些信号。

©博世保留商标和专利应用在内的所有权力，未经我公司许可不得复制或传递给第三方。

© All rights with Robert Bosch GmbH, including trademark / patent applications. Any right of disposal, as copying and distribution to third parties is ours.

测试信号质量时，所有转毂需要旋转（可以在相关性测试结束后立即进行）。ECU运行内部指令，记录每个车轮转动至少一周时相应传感器的读数，存储测试期间的最大和最小速度值，并且在测试完成之后将这些数据输出。

传感器错误测出 ⇒ 错误消息，继续
没有错误测出 ⇒ 继续

Remarks:
The speed of the min/max values are proposals and should be defined by trails of the manufacturer.
To check the correlation of the sensors (connection of sensor to the corresponding wheel), the test rig turns on the individual rolls one after the other. The test speed must be adapted to the dynamometer design. (e.g. test speed = 5 km/h).
The tester records the wheel speed data received from the ECU and verifies the signals.
During the signal quality test, all rolls will be turned on (this step will be executed immediately after the correlation test).
The ECU runs an internal routine that records all sensor data over at least one revolution, stores the minimum and maximum speed data of each wheel during the test time and outputs these data to the tester after the test has been finished.
The test bench computer evaluates these data and compares them with internal limit data.

Sensor failure detected ⇒ Failure message, continue
No failures detected ⇒ Continue

轮速传感器误差计算：
Bosch 建议允许公差： ±10%

For calculation of the allowed WSS tolerance:
V rolls = 5km/h
WSSmin = 5km/h – 10% = 4,5 km/h
WSSmax =5km/h + 10% = 5,5 km/h

Bosch recommends tolerance: ±10%

这里的误差计算考虑到胎压的影响，测试台和 ECU 的误差影响，最终的公差值应充分考虑上述影响，由客户通过试验来确定。

The given tolerances are calculated concerning of tyre pressure, tolerance of the test bench and the ECU electrical circuit tolerance. The valid tolerance must be found and confirmed by trials at the customer.

©博世保留商标和专利应用在内的所有权力，未经我公司许可不得复制或传递给第三方。

© All rights with Robert Bosch GmbH, including trademark / patent applications. Any right of disposal, as copying and distribution to third parties is ours.

方式 1 测试图表： Version 1 Test diagram:

轮速传感器测试（安装位置，相关性和信号质量检测）
Wheel speed sensor test (mounting position, correlation and signal quality check)

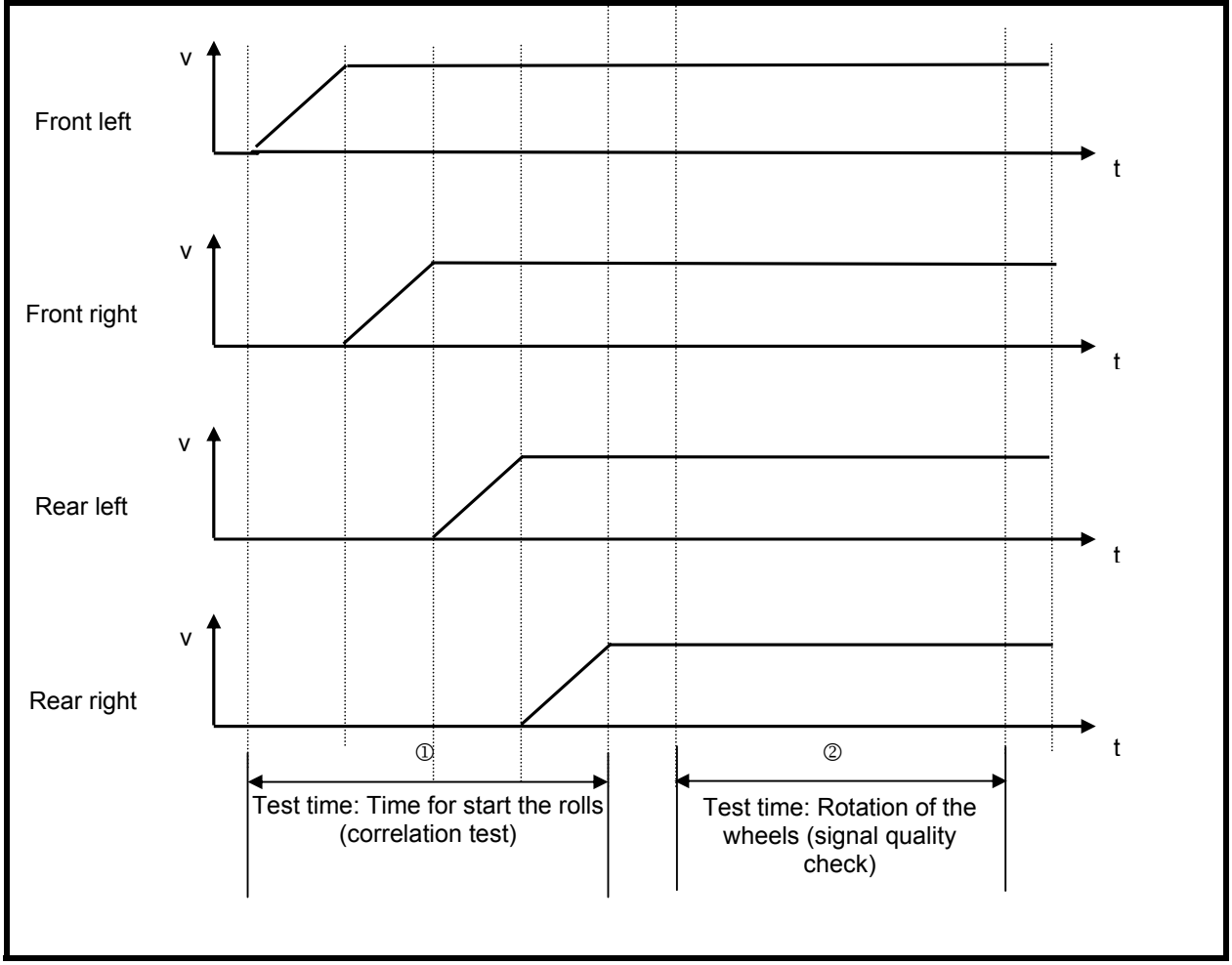

备注：
测试设备过转毂逐步分别驱动各个车轮，同时测试设备索要传感器的轮速数据并验证其相关性。为了识别有关传感器，带齿的车轮，气隙或偏离的错误，电子控制单元每10毫秒对每个轮速传感器的轮速检测一次，存储并输出速度数据的最大值和最小值（在测试期间）。

Remarks:
The test rig turns on the individual rolls by external drives step by step while the tester request the speed data of the sensors and checks the correct correlation. The ECU internally picks up each sensor speed every 10 ms, stores and outputs the minimum and maximum speed data (within the test time) in order to identify faults of the sensor, toothed wheels, air gaps or eccentricities.

©博世保留商标和专利应用在内的所有权力，未经我公司许可不得复制或传递给第三方。

© All rights with Robert Bosch GmbH, including trademark / patent applications. Any right of disposal, as copying and distribution to third parties is ours.

3.5.2 方式 2： Version 2:

轮速传感器测试（相关性和信号质量检测；方式二） Wheel speed sensor test (correlation and signal quality check; Version 2)				
Test stand:		ECU data:		Requested data:
Roll front left Roll front right Roll rear left Roll rear right	On; 3 km/h On; 6 km/h On: 9 km/h On; 12 km/h	Wheel FL : min/max Wheel FR : min/max Wheel RL : min/max Wheel RR : min/max	xx km/h xx km/h xx km/h xx km/h	2,7 km/h < xx < 3,3 km/h 5,4 km/h < xx < 6,6 km/h 8,1 km/h < xx < 9,9 km/h 10,8 km/h < xx < 13,2 km/h

备注：
每对转毂的最大最小速度应通过试验来确定。
为了检测传感器的相关性（连接传感器与相应的车轮）和信号的质量，转毂各自分别转动，速度应和设备相适应，例如：3，6，9，12 km/h。
设备应记录下 ECU 发出来的各轮的速度值并检验，在测试中所有转毂都是转动的。
轮速传感器测试时，电子控制单元将运行系统内部程序。在整个测试过程中，电子控制单元会记录每个车轮转动至少一周时相应传感器的数据，同时电子控制单元会存储测试期间的最小最大的速度数据，并在测试完成以后输出数据给测试设备。
测试实验台计算机评估这些数据，并与设备设定的速度的门限值进行比较。

传感器错误测出 ⇒ 错误消息，继续
没有错误测出 ⇒ 继续

Remarks:

The speed of the once roller pairs and the min/max values are proposals and should be defined by trails of the manufacturer.

To check the correlation (connection of sensor to the corresponding wheel) and signal quality of the sensors, the test rig turns on the individual rolls together. The test speed must be adapted to the dynamometer design, e.g. test speed = 3, 6, 9, 12 km/h.

The tester records the wheel speed data received from the ECU and verifies the signals.

During the test, all rolls will be turned on.

The ECU runs an internal routine that records all sensor data at one revolution, stores the minimum and maximum speed data of each wheel during the test time and outputs these data to the tester after the test has been finished.

The test bench computer evaluates these data and compares them with internal limit data.

Sensor failure detected ⇒ Failure message, continue
No failures detected ⇒ Continue

©博世保留商标和专利应用在内的所有权力，未经我公司许可不得复制或传递给第三方。

© All rights with Robert Bosch GmbH, including trademark / patent applications. Any right of disposal, as copying and distribution to third parties is ours.

方式 2 测试图表： Version 2 Test diagram:

轮速传感器测试（相关性和信号质量检测）
Wheel speed sensor test (correlation and signal quality check)

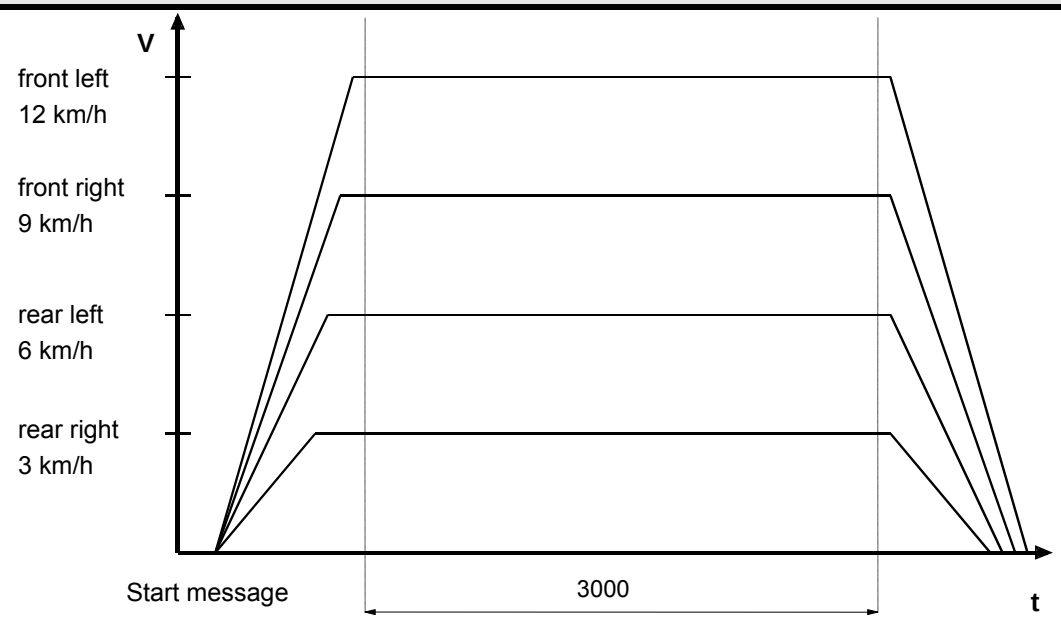

Signal quality and correlation check one rotation of the wheels
The values are examples und must be defined by the customer

备注：
测试设备过转毂逐步分别驱动各个车轮，同时测试设备索要传感器的轮速数据并验证其相关性。为了识别有关传感器，带齿的车轮，气隙或偏离的错误，电子控制单元每10毫秒对每个轮速传感器的轮速检测一次，存储并输出速度数据的最大值和最小值（在测试期间）。

Remarks:
The test rig turns on the individual rolls by external drives step by step while the tester request the speed data of the sensors and checks the correct correlation. The ECU internally picks up each sensor speed every 10 ms, stores and outputs the minimum and maximum speed data (within the test time) in order to identify faults of the sensor, toothed wheels, air gaps or eccentricities.

©博世保留商标和专利应用在内的所有权力，未经我公司许可不得复制或传递给第三方。

© All rights with Robert Bosch GmbH, including trademark / patent applications. Any right of disposal, as copying and distribution to third parties is ours.

3.5.3 信号质量测试（以一个车轮的为例）Signal quality test (example of one wheel):

信号质量测试（以一个车轮的为例）Signal quality test (example of one wheel):

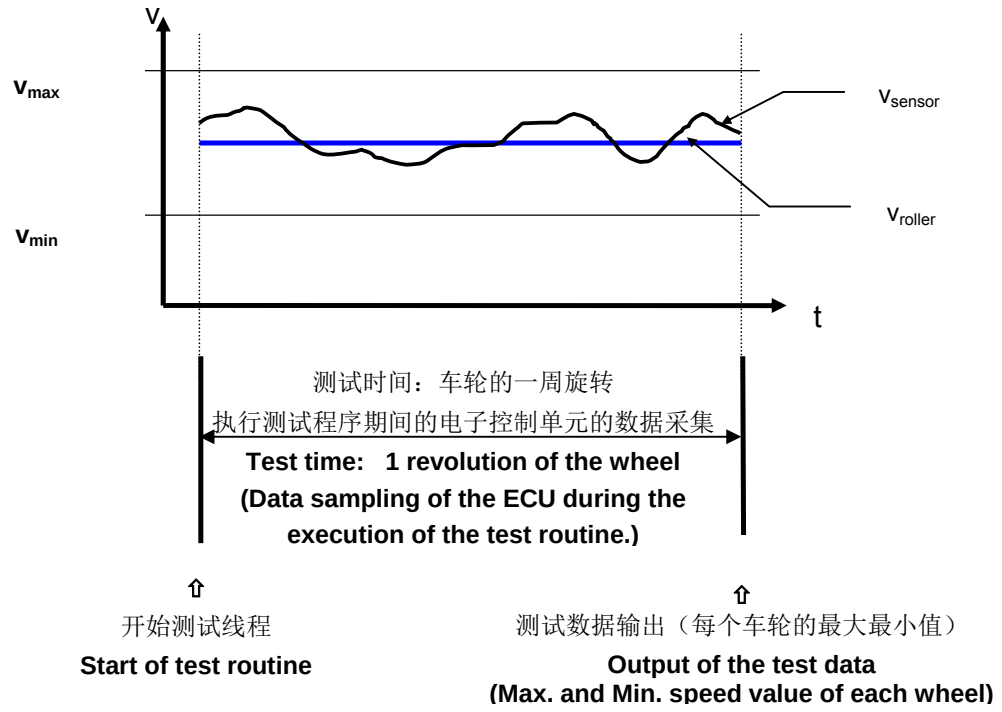

测试步骤：
1.程序开始后，电子控制单元会在整个执行期间连续采集所有车轮的轮速数据，并检测最大值和最小值。
2.ECU 将数据传输给测试设备。
3.测试设备对接收的轮速数据与设定的门限值进行对比。

备注：
门限值的设定必须能够满足规定的轮速信号公差的要求。

Test Step:
1.After the routine has been started, the ECU will continuously sample all wheel speed data and check for the minimum and the maximum value during the execution time.
2.This data is transmitted to the test equipment.
3.The test equipment must evaluate this data and compare with given limits.

Remarks:
The limits are defined to meet the specified tolerances of the wheel speed signals.

©博世保留商标和专利应用在内的所有权力，未经我公司许可不得复制或传递给第三方。

© All rights with Robert Bosch GmbH, including trademark / patent applications. Any right of disposal, as copying and distribution to third parties is ours.

3.6 ESP 动态测试 ESP dynamic test

本文件描述了两种方式进行 ESP 动态测试：
方式 1. 通过测试力值评估
方式 2. 通过测试速度差评估
This document described two versions for the ESP dynamic test :
Version 1: Test via measuring force value.
Version 2: Test via measuring speed value.

3.6.1 方式 1： Version 1:

ESP 动态测试 (电磁阀功能测试和阀体关系测试) Dynamic ESP Test (Solenoid valve functional test and valve correlation test)				
操作员：Operator:	测试设备： Test Rig:	制动力（牛顿）： Brake Force (N):		要求值（牛顿）： Demand Data (N):
放开制动踏板 Keep Brake Pedal released	增加前左轮制动力 Pressure Increase FL 测量制动力 Measure Brake Forces	前左轮 Wheel FL: 前右轮 Wheel FR: 后左轮 Wheel RL: 后右轮 Wheel RR:	xx N xx N xx N xx N	1600N < F < 2400 N 0N < F < 200 N 0N < F < 200 N 0N < F < 200 N
放开制动踏板 Keep Brake Pedal released	解除前左轮制动力 Pressure Release FL 测量制动力 Measure Brake Forces	前左轮 Wheel FL: 前右轮 Wheel FR: 后左轮 Wheel RL: 后右轮 Wheel RR:	xx N xx N xx N xx N	0N < F < 200 N 0N < F < 200 N 0N < F < 200 N 0N < F < 200 N
放开制动踏板 Keep Brake Pedal released	增加前右轮制动力 Pressure Increase FR 测量制动力 Measure Brake Forces	前左轮 Wheel FL: 前右轮 Wheel FR: 后左轮 Wheel RL: 后右轮 Wheel RR:	xx N xx N xx N xx N	0N < F < 200 N 1600N < F < 2400 N 0N < F < 200 N 0N < F < 200 N
放开制动踏板 Keep Brake Pedal released	解除前右轮制动力 Pressure Release FR 测量制动力 Measure Brake Forces	前左轮 Wheel FL: 前右轮 Wheel FR: 后左轮 Wheel RL: 后右轮 Wheel RR:	xx N xx N xx N xx N	0N < F < 200 N 0N < F < 200 N 0N < F < 200 N 0N < F < 200 N
放开制动踏板 Keep Brake Pedal released	增加左后轮制动力 Pressure Increase RL 测量制动力 Measure Brake Forces	前左轮 Wheel FL: 前右轮 Wheel FR: 后左轮 Wheel RL: 后右轮 Wheel RR:	xx N xx N xx N xx N	0N < F < 200 N 0N < F < 200 N 800N < F < 1400 N 0N < F < 200 N
放开制动踏板 Keep Brake Pedal released	解除左后轮制动力 Pressure Release RL 测量制动力 Measure Brake Forces	前左轮 Wheel FL: 前右轮 Wheel FR: 后左轮 Wheel RL: 后右轮 Wheel RR:	xx N xx N xx N xx N	0N < F < 200 N 0N < F < 200 N 0N < F < 200 N 0N < F < 200 N
放开制动踏板 Keep Brake Pedal released	增加右后轮制动力 Pressure Increase RR 测量制动力 Measure Brake Forces	前左轮 Wheel FL: 前右轮 Wheel FR: 后左轮 Wheel RL: 后右轮 Wheel RR:	xx N xx N xx N xx N	0N < F < 200 N 0N < F < 200 N 0N < F < 200 N 800N < F < 1400 N

©博世保留商标和专利应用在内的所有权力，未经我公司许可不得复制或传递给第三方。

© All rights with Robert Bosch GmbH, including trademark / patent applications. Any right of disposal, as copying and distribution to third parties is ours.

放开制动踏板 Keep Brake Pedal released	解除右后轮制动力 Pressure Release RR 测量制动力 Measure Brake Forces	前左轮 Wheel FL: 前右轮 Wheel FR: 后左轮 Wheel RL: 后右轮 Wheel RR:	xx N xx N xx N xx N	0N < F < 200 N 0N < F < 200 N 0N < F < 200 N 0N < F < 200 N

备注:
为防止阀体过热，在抽真空加注或排气后至少 5 分钟后才能进行动态测试。
在动态测试过程中的注意事项：
必须确保测试程序正确。
在测试过程中应保证阀组继电器不能关闭。

当动态测试结束后，应再次启动监控：
1. 禁用阀组继电器关闭
2. 执行动态测试
3. 启用阀组继电器关闭

如测试的速度超过 10km/h 则测试时应取消速度限制。
测试设备测量制动力，在分别的泄压和恢复过程中测量制动力值来验证阀体功能和阀体关系是否正确。
阀体的激励时间和制动力的测量时间必须与测力计和车的配置相匹配。
评价可以采用测量制动力或转毂的减速度，也可以是车轮的减速度。
在动态测试过程中测试软件顺序开启相应阀门实现增压减压的循环。
ECU 记录数据并可以传给测试设备进行进一步的评估。
所涉及到的门限值均应是与车辆相关的经验值，所列数据仅供参考。

ESP 动态测试通过 ⇒ 继续
ESP 动态测试不通过 ⇒ 记录错误信息，继续

Remarks:
To prevent a overheating of the coils it is necessary to wait a minimum time of 5 minutes after the evac/fill process or repair bleeding process until the start of the function base brake and dynamic test.
At the execution of the dynamic test there is something to note:
This is necessary to guarantee a correct course of the test.
The valve relay may not switch off during the dynamic test.

After the execution of the dynamic test it is necessary to activate the monitoring again.
1. Valve Relay shut down deactivation
2. Execution of the dynamic test
3. Valve Relay shut down activation

The speed limit should be deactivated when test speed more than 10 km/h.
The operator must keep the brake pedal constant during the entire execution of the test.
The base brake test is defined to check the performance of the foundation brake system.
The evaluation can be done by measuring the brake forces or deceleration rates of the rollers. It can also be done by evaluating the deceleration rates of the wheels out of the ECU data.
The dynamic test is designed to check the correct correlation, function and tightness of the valves and the correlation of the wheel speed sensors.
The tester software turns the individual valves into pressure release and pressure increase cycles during the dynamic test.
This deceleration rates are measured by the ECU and transmitted to the tester for further evaluation and comparison with given limits.

©博世保留商标和专利应用在内的所有权力，未经我公司许可不得复制或传递给第三方。

© All rights with Robert Bosch GmbH, including trademark / patent applications. Any right of disposal, as copying and distribution to third parties is ours.

The timing of valve actuation and deceleration measuring times must be adapted onto the dynamics of the dynamometer and the vehicle configuration.

The limits of the force rates must be set according to the given measuring times and the deceleration rates out of the base brake test as a reference of the initial brake apply, all data only for reference.

Dynamic ESP Test OK ⇒ Continue
Dynamic ESP Test NOK ⇒ Failure message, continue

©博世保留商标和专利应用在内的所有权力，未经我公司许可不得复制或传递给第三方。

© All rights with Robert Bosch GmbH, including trademark / patent applications. Any right of disposal, as copying and distribution to third parties is ours.

ESP 单一车轮的动态测试图表（方式 1) ESP Dynamic test diagram at one wheel(Version 1)

Dynamic ESP Test

Test Diagram (Example of one wheel):

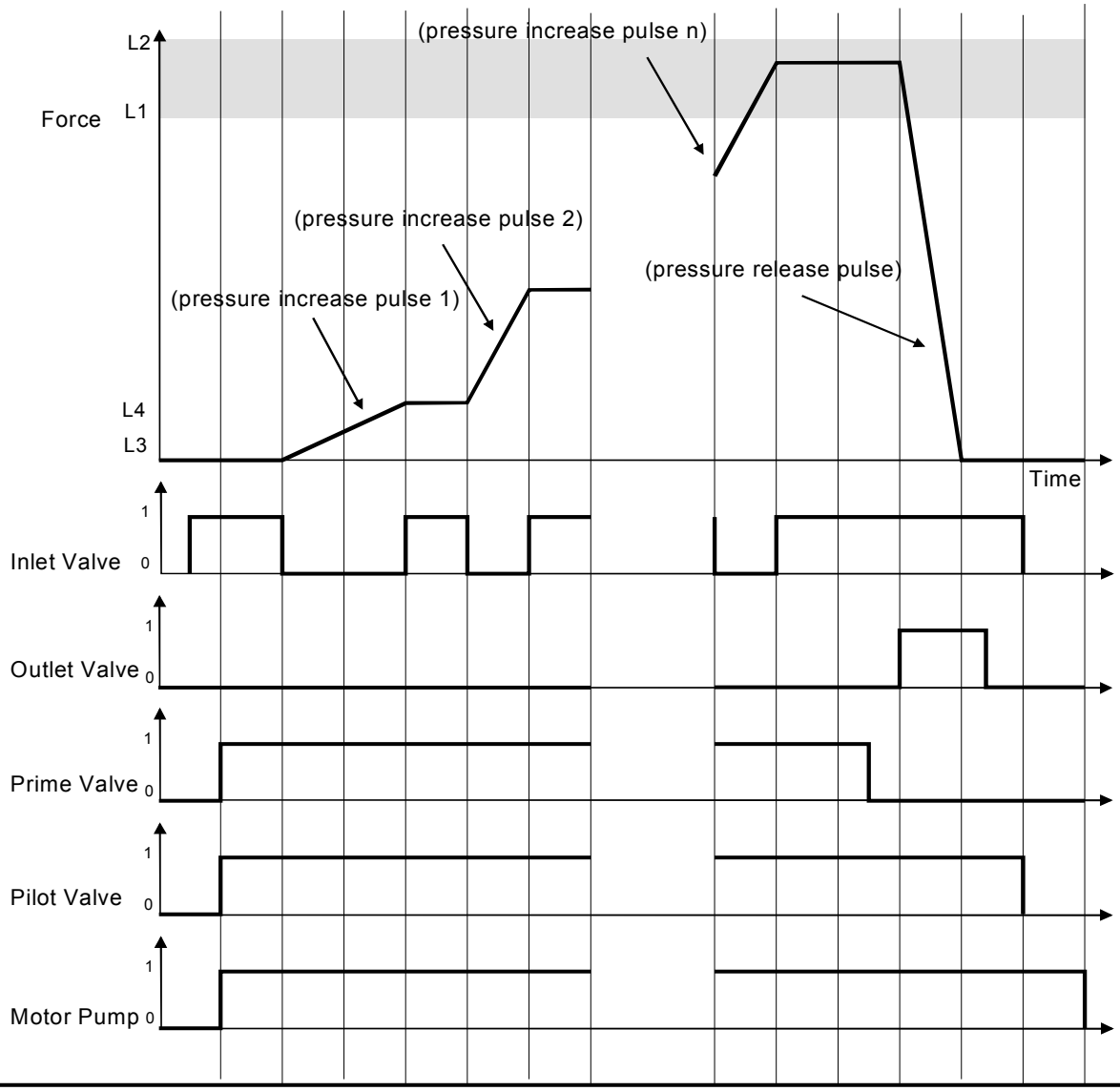

©博世保留商标和专利应用在内的所有权力，未经我公司许可不得复制或传递给第三方。

© All rights with Robert Bosch GmbH, including trademark / patent applications. Any right of disposal, as copying and distribution to third parties is ours.

ESP 整车完整动态测试图标（基于双轴） Graphical presentation of the entire ESP dynamic test

ESP test

Test diagram:

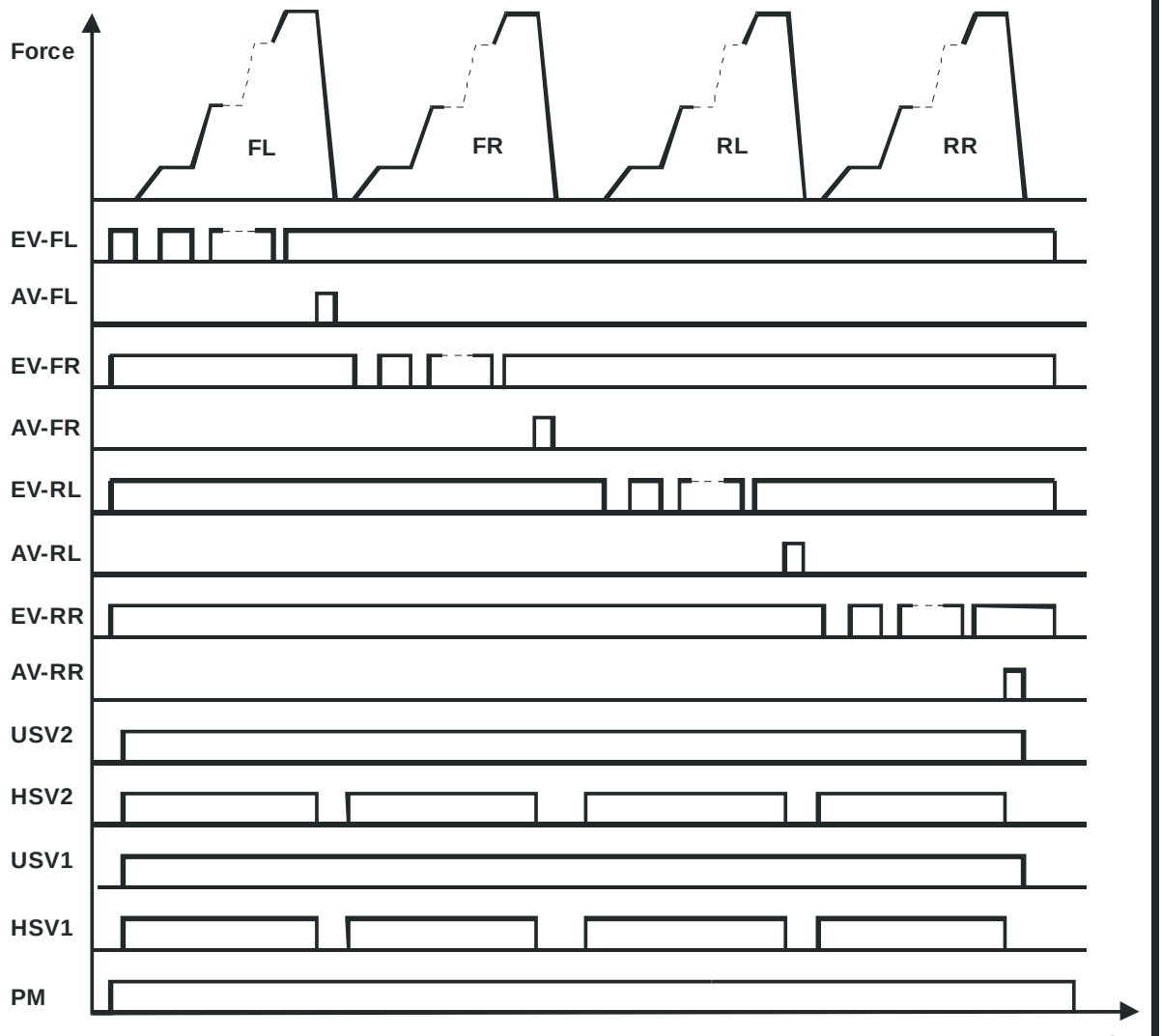

©博世保留商标和专利应用在内的所有权力，未经我公司许可不得复制或传递给第三方。

© All rights with Robert Bosch GmbH, including trademark / patent applications. Any right of disposal, as copying and distribution to third parties is ours.

3.6.2 方式 2： Version 2:

ESP 动态测试 (电磁阀功能测试和阀体关系测试) Dynamic ESP Test (Solenoid valve functional test and valve correlation test)				
操作员：Operator:	测试设备： Test Rig:	电子控制单元数据： ECU Data:		要求值（千米/时）： Demand Data (km/h):
放开制动踏板 Keep Brake Pedal released	Measuring of the free-wheeling decelerations 测量自由转动的减速度	前左轮 Wheel FL: 前右轮 Wheel FR: 后左轮 Wheel RL: 后右轮 Wheel RR:	Δ xx km/h Δ xx km/h Δ xx km/h Δ xx km/h	$\Delta V_{FL} \leq \Delta V_{free_max}$ $\Delta V_{FR} \leq \Delta V_{free_max}$ $\Delta V_{RL} \leq \Delta V_{free_max}$ $\Delta V_{RR} \leq \Delta V_{free_max}$
放开制动踏板 Keep Brake Pedal released	增加前左轮轮缸压力 Pressure Increase FL 测量速度差 Measure Brake Forces	前左轮 Wheel FL: 前右轮 Wheel FR: 后左轮 Wheel RL: 后右轮 Wheel RR:	Δ xx km/h Δ xx km/h Δ xx km/h Δ xx km/h	$\Delta xx > \Delta V_{tbd}$ km/h $\Delta xx \leq \Delta V_{free_max1}$ km/h $\Delta xx \leq \Delta V_{free_max1}$ km/h $\Delta xx \leq \Delta V_{free_max1}$ km/h
放开制动踏板 Keep Brake Pedal released	解除前左轮轮缸压力 Pressure Release FL 测量速度差 Measure Brake Forces	---	---	---
放开制动踏板 Keep Brake Pedal released	增加前右轮轮缸压力 Pressure Increase FR 测量速度差 Measure Brake Forces	前左轮 Wheel FL: 前右轮 Wheel FR: 后左轮 Wheel RL: 后右轮 Wheel RR:	Δ xx km/h Δ xx km/h Δ xx km/h Δ xx km/h	$\Delta xx \leq \Delta V_{free_max1}$ km/h $\Delta xx > \Delta V_{tbd}$ km/h $\Delta xx \leq \Delta V_{free_max1}$ km/h $\Delta xx \leq \Delta V_{free_max1}$ km/h
放开制动踏板 Keep Brake Pedal released	解除前右轮轮缸压力 Pressure Release FR 测量速度差 Measure Brake Forces	---	---	---
放开制动踏板 Keep Brake Pedal released	增加左后轮轮缸压力 Pressure Increase RL 测量速度差 Measure Brake Forces	前左轮 Wheel FL: 前右轮 Wheel FR: 后左轮 Wheel RL: 后右轮 Wheel RR:	Δ xx km/h Δ xx km/h Δ xx km/h Δ xx km/h	$\Delta xx \leq \Delta V_{free_max1}$ km/h $\Delta xx \leq \Delta V_{free_max1}$ km/h $\Delta xx > \Delta V_{tbd}$ km/h $\Delta xx \leq \Delta V_{free_max1}$ km/h
放开制动踏板 Keep Brake Pedal released	解除左后轮轮缸压力 Pressure Release RL 测量速度差 Measure Brake Forces	---	---	---
放开制动踏板 Keep Brake Pedal released	增加右后轮轮缸压力 Pressure Increase RR 测量速度差 Measure Brake Forces	前左轮 Wheel FL: 前右轮 Wheel FR: 后左轮 Wheel RL: 后右轮 Wheel RR:	Δ xx km/h Δ xx km/h Δ xx km/h Δ xx km/h	$\Delta xx \leq \Delta V_{free_max1}$ km/h $\Delta xx \leq \Delta V_{free_max1}$ km/h $\Delta xx \leq \Delta V_{free_max1}$ km/h $\Delta xx > \Delta V_{tbd}$ km/h
放开制动踏板 Keep Brake Pedal released	解除右后轮轮缸压力 Pressure Release RR 测量速度差 Measure Brake Forces	---	---	---
放开制动踏板 Keep Brake Pedal released	Measuring of the free-wheeling decelerations 测量自由转动的减速度	前左轮 Wheel FL: 前右轮 Wheel FR: 后左轮 Wheel RL: 后右轮 Wheel RR:	Δ xx km/h Δ xx km/h Δ xx km/h Δ xx km/h	$\Delta V_{FL} \leq \Delta V_{free_max}$ $\Delta V_{FR} \leq \Delta V_{free_max}$ $\Delta V_{RL} \leq \Delta V_{free_max}$ $\Delta V_{RR} \leq \Delta V_{free_max}$

©博世保留商标和专利应用在内的所有权力，未经我公司许可不得复制或传递给第三方。

© All rights with Robert Bosch GmbH, including trademark / patent applications. Any right of disposal, as copying and distribution to third parties is ours.

注：
速度降低的门限值必须根据不同的测试设备和车型来决定。

Remark:
The limits of the deceleration rates must be individually suited per the dynamic behavior of the vehicle on the test rig!.

©博世保留商标和专利应用在内的所有权力，未经我公司许可不得复制或传递给第三方。

© All rights with Robert Bosch GmbH, including trademark / patent applications. Any right of disposal, as copying and distribution to third parties is ours.

ESP 动态测试图表（方式 2) ESP Dynamic test diagram(Version 2)

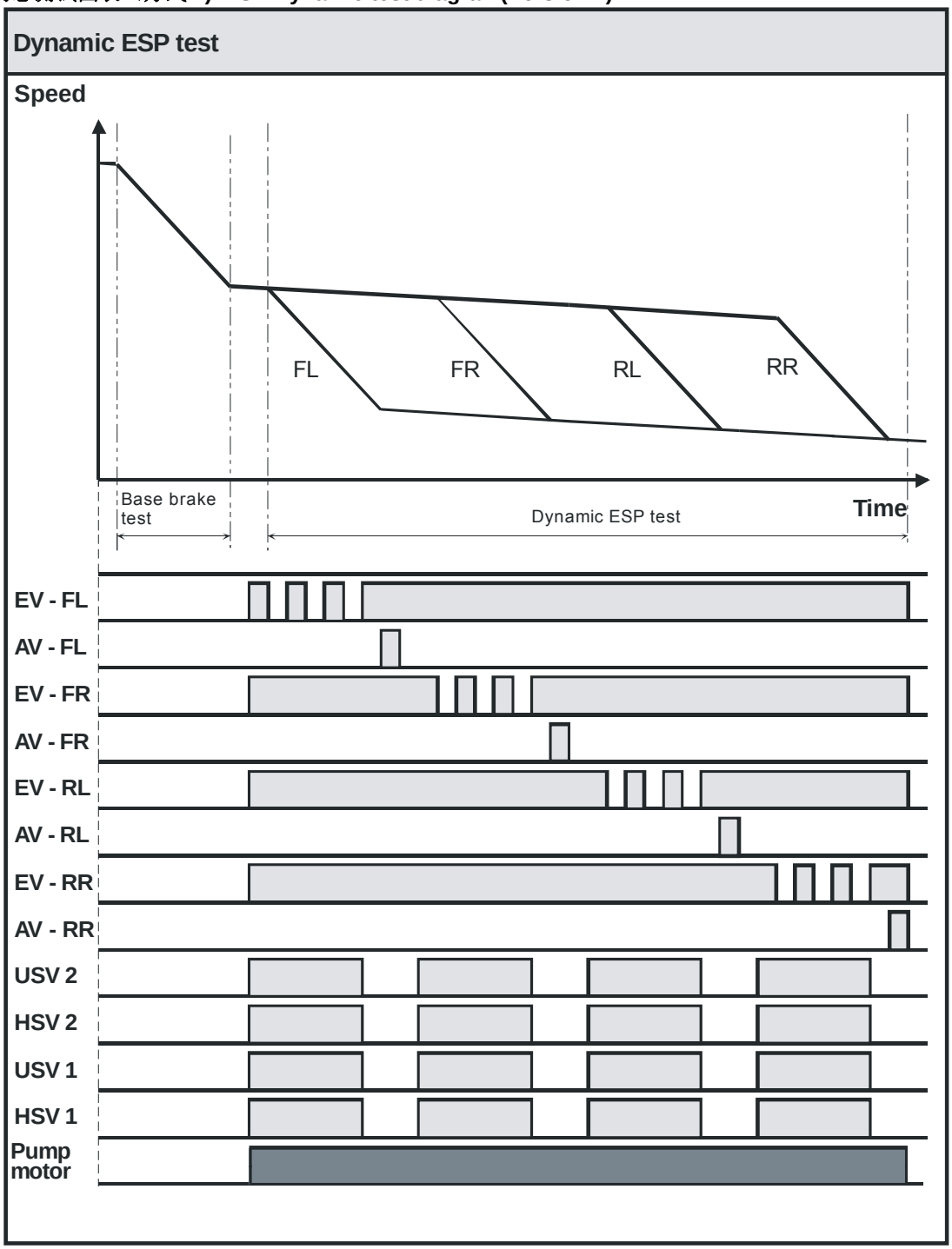

©博世保留商标和专利应用在内的所有权力，未经我公司许可不得复制或传递给第三方。

© All rights with Robert Bosch GmbH, including trademark / patent applications. Any right of disposal, as copying and distribution to third parties is ours.

3.6.3 动态测试 ESP 液压功能图 Schematic Diagram of ESP Dynamic Test HU Functions

增压 Function Pressure apply (increase function)

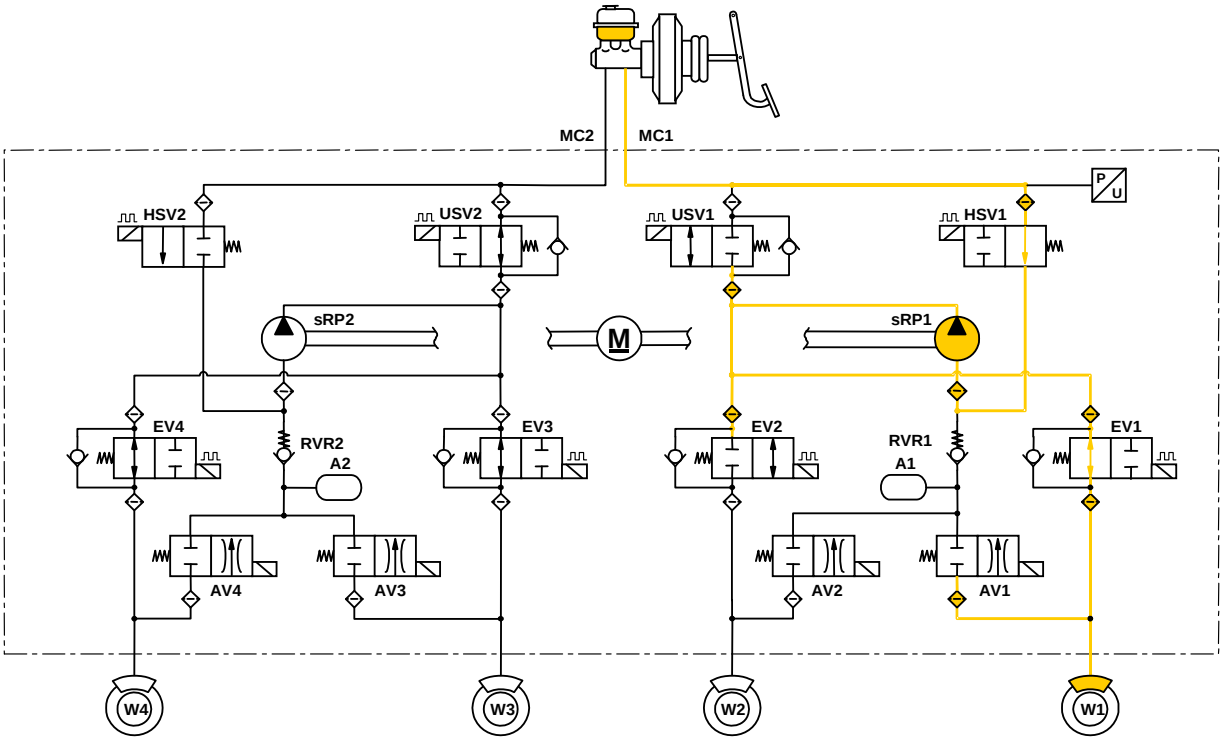

驱动一个主缸回路的导向阀（如 HSV1），高压阀(如 USVI)和一个进液阀(如 EV2)。
泵在运转时液压模块内部产生一个系统压力。
在卡钳处实现通过进液阀脉冲循环控制的增压。
通常需要多个脉冲增压才能达到足够的制动力要求。

The pilot-, prime- and one inlet valve of one master cylinder circuit are energized.
While running the self sucking pump, the hydraulic modulator creates a system pressure internally.
The pressure increase pulse at the calliper is modulated by cycling the inlet valve.
General are several pulses necessary to create a sufficient brake force.

©博世保留商标和专利应用在内的所有权力，未经我公司许可不得复制或传递给第三方。

© All rights with Robert Bosch GmbH, including trademark / patent applications. Any right of disposal, as copying and distribution to third parties is ours.

保压 Function Pressure Maintain (hold function)

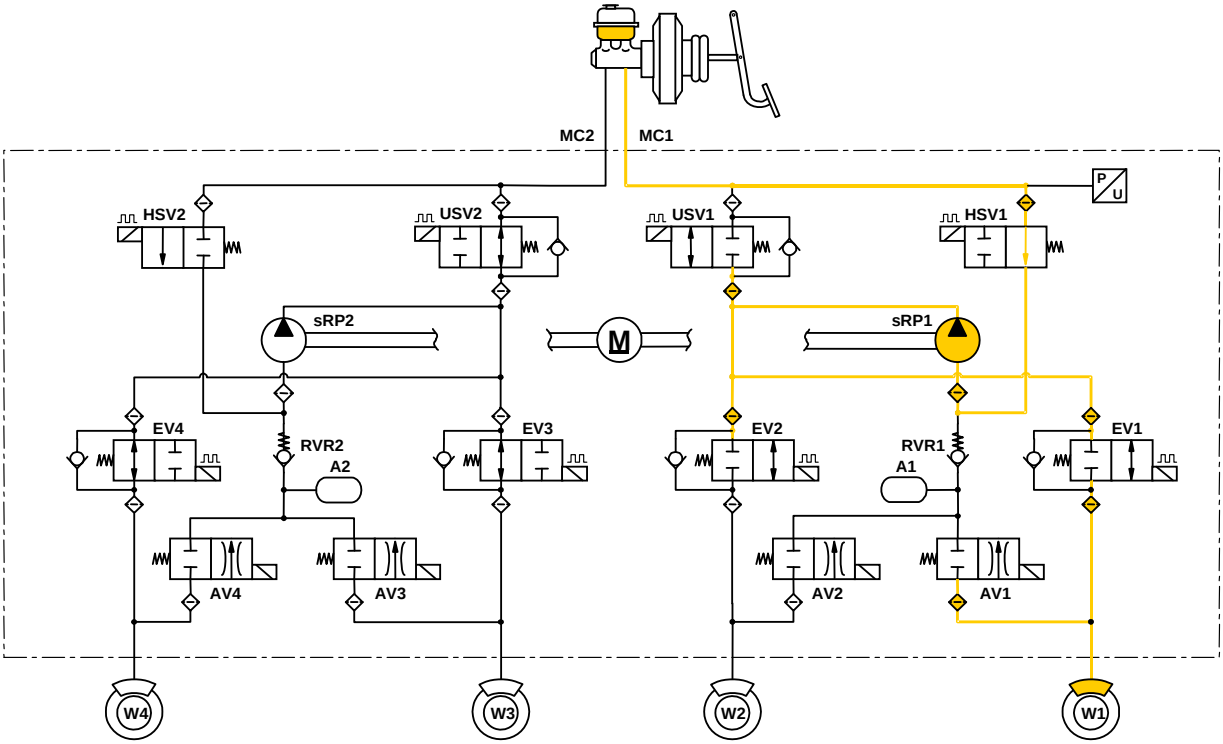

驱动进液阀（如 EV1）,将压力锁定在卡钳和进液出液阀之间。

The created system pressure is locked between the calliper as well as the inlet and outlet valve. The inlet valve is energized and outlet valve is not energized.

©博世保留商标和专利应用在内的所有权力，未经我公司许可不得复制或传递给第三方。

© All rights with Robert Bosch GmbH, including trademark / patent applications. Any right of disposal, as copying and distribution to third parties is ours.

减压 Function Pressure Dump (release function)

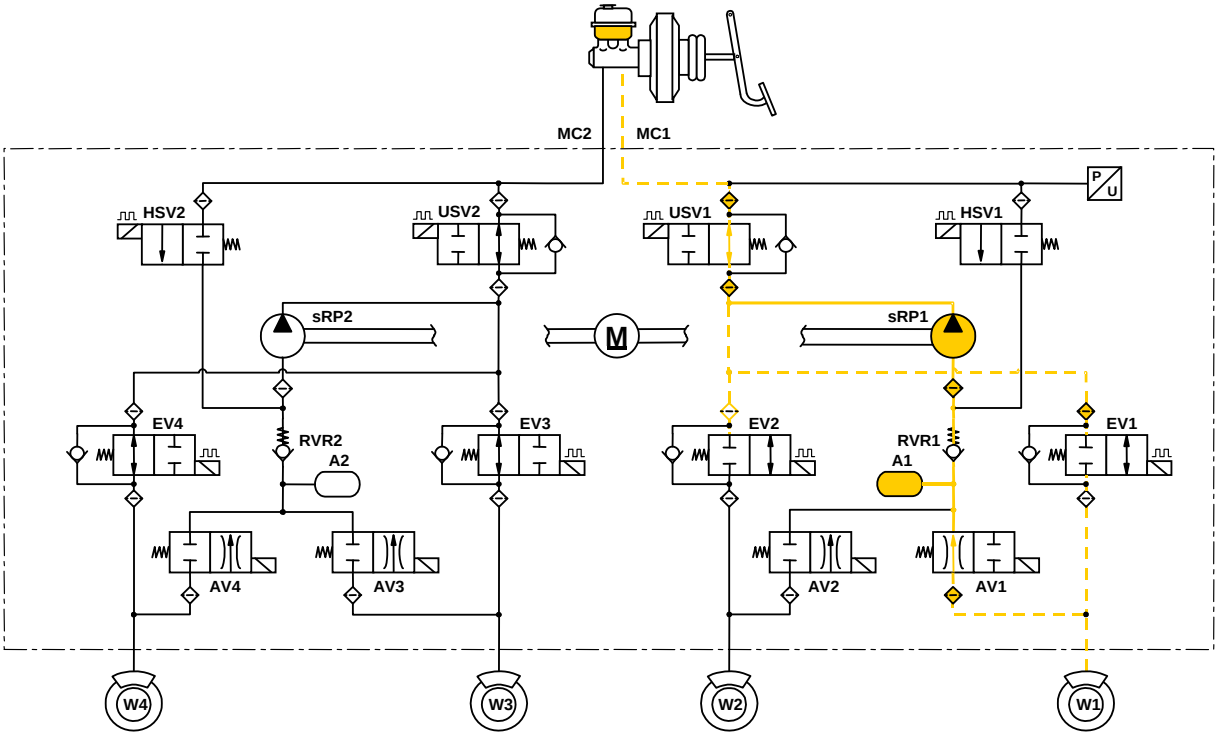

驱动一个主缸回路的导向阀（如 USV1），一个出液阀(如 AV1)和两个进液阀（如 EV1,EV2）。
泵在运转时将蓄能器充满同时液压模块内部产生一个系统压力。
在卡钳处实现通过出液阀循环控制的降压。

备注：
在对所有轮实施最后一次阀驱动后（在测试结束时），为排空蓄能器泵马达必须滞后两秒再停止工作。

The pilot-, outlet- and both inlet valves of one master cylinder circuit are energized.
While running the self sucking pump the accumulator chamber will be filled and the hydraulic modulator decrease the system pressure internally.
The pressure decrease at the calliper is modulated by cycling the outlet valve.

Note:
After the last valve actuation of all wheels, (at the end of the entire test) and a unpressurized system, the pump motor should be actuate two seconds longer to discharge the accumulator chamber.

©博世保留商标和专利应用在内的所有权力，未经我公司许可不得复制或传递给第三方。

© All rights with Robert Bosch GmbH, including trademark / patent applications. Any right of disposal, as copying and distribution to third parties is ours.

4 诊断功能 Diagnosis Function

4.1 建立扩展诊断模式 Start Extended Diagnostic Session

建立扩展诊断模式 Start Extended Diagnostic Session	
操作者 Operator:	测试设备/ECU Tester / ECU:
→关闭点火开关。Ignition off. →连接诊断接口。Connect diagnostic interface. →打开点火开关。Ignition on. →等待 ESP 系统自检（点火后初始化测试）结束： Wait till the ESP system check (initial tests after ignition on) is finished:	建立扩展诊断模式 Start Extended Diagnostic Session。

ESP 进入扩展诊断模式，ESP 报警灯被点亮。在下线检测开始时，操作人员应观察 ESP 报警灯状态是否正常。
根据相应的规格，以客户诊断为基础在测试仪和电子控制单元之间建立通信。
在 ESP 系统通电之后，可以立即起动。
如果未成功建立通信，在测试中断之前应重复大约 3 次。

通信不成功 ⇒ 设置故障信息，终止
通信成功 ⇒ 继续

When ESP start extended diagnostic session, ESP warning light will be turn on. At the beginning of EOL test, operator should observe the ESP warning light to judge whether the warning light status is right or not.
The communication set up between the Tester and the ECU is based on the customer diagnosis according to the corresponding specification.
It can be started immediately after the system is powered up.
In case of a non successful communication set up repeat for about 3 times before the test is interrupted.

Communication not successful ⇒ set failure message, abort
Communication successful ⇒ continue

©博世保留商标和专利应用在内的所有权力，未经我公司许可不得复制或传递给第三方。

© All rights with Robert Bosch GmbH, including trademark / patent applications. Any right of disposal, as copying and distribution to third parties is ours.

4.2 电子控制单元识别 ECU-Identification

电子控制单元识别 ECU Identification	
测试设备 Tester	电子控制单元 ECU
电子控制单元识别 ECU identification	电子控制单元数据输出 Output of the requested ECU data
关于“电子控制单元识别”更多信息请参考客户诊断功能描述。More information to the chapter “ECU identification” is to be inferred from the customer specific documentations.	

备注：
电子控制单元识别的目的是检查 ESP 和车辆是否配套，防止生产线误装其他 ESP。
待评估的电子控制单元识别数据必须由客户及其装配工厂确认。
电子控制单元识别数据必须和下线检测设备中存储的默认数据进行对比，以确保所选择的阀启动程序正确无误。
当 ESP 软件升级时，电子控制单元识别数据将发生变更，因此下线检测设备库应当能用编辑菜单进行方便的升级。关于“电子控制单元识别”更多信息请参考客户诊断功能描述。

未知系统	⇒	打印故障，终止测试
正确系统	⇒	继续

Remark:
The intention of ECU identification is checking whether ESP can match the vehicle or not, and preventing operator from assembling unsuitable ESP.
The to be evaluated ECU identification data must be confirmed by the customer and its assembly plants.
The ECU identification data must be compared with the in the end of line test equipment software stored desired ECU data. This is required to select the right valve activation sequence. The ECU identification data might be changed in case of an ESP software update respectively modification, therefore it must be easily possible with editor menu to update the data base of end of line test equipment .
More details to the chapter “ECU identification” are to be inferred from the customer specific documentations.

Unknown System	⇒	Abort Test
System detected	⇒	Continue

©博世保留商标和专利应用在内的所有权力，未经我公司许可不得复制或传递给第三方。

© All rights with Robert Bosch GmbH, including trademark / patent applications. Any right of disposal, as copying and distribution to third parties is ours.

4.2.1 检查系统状态 Check System Status

检查系统状态 Check System Status	
测试设备 Tester	电子控制单元 ECU
检查系统状态 Check System Status	系统状态数据输出 Output of the requested System Status data
关于“检查系统状态”更多信息请参考客户诊断功能描述。More information to the chapter “Check System Status ” is to be inferred from the customer specific documentations.	

在下线检测过程前诊断设备必须识别 ECU 的状态，主动或被动状态
如果检测任何故障，ECU 会关闭系统并取消阀和电机的动作
下面的失效情形会导致系统的关闭：阀的故障，阀继电器的故障，电机及其继电器的故障
应通过检测软件的数值范围来校验 ECU 的数据

数据错误 ⇒ 设置故障信息，退出
数据正确 ⇒ 继续

Remarks:
Prior to the EOL test process, the diagnostic equipment must identify whether the ECU is active or passive.
In case of any failure detection, the ECU will have disabled the system and have aborted the valve and pump motor activation’s.
Following failures lead to a shut down of the system: all valve faults, VR fault, RFP and MR faults.
The ECU data must be verified with the limit data of the tester software.

Data correct ⇒ Continue
Data not correct ⇒ Failure message, abort

©博世保留商标和专利应用在内的所有权力，未经我公司许可不得复制或传递给第三方。

© All rights with Robert Bosch GmbH, including trademark / patent applications. Any right of disposal, as copying and distribution to third parties is ours.

4.3 读取抽真空加注过程字节 Read E&F Process Byte

读取抽真空加注过程字节 Read E&F Process Byte	
测试设备 Tester	电子控制单元 ECU
请求并评估过程字节。 Requests and evaluates the process bytes.	读取 EEPROM 中的过程字节并回复给测试设备。 Reads the process bytes from the EEPROM and responses the requested data.
关于“读取抽真空加注过程字节”更多信息请参考客户诊断功能描述。More information to the chapter “Read E&F Process Byte ” is to be inferred from the customer specific documentations.	

加注字节识别之前的抽真空加注或离线排气是否正确运行。
在转毂处评估过程字节的前提是抽真空加注和排气设备具有写入字节的功能。
在抽真空加注过程后或排气程序执行完毕，随着 ROM 程序的结束，电子控制单元检查阀继电器的状态。如果阀继电器的状态是正常的，电子控制单元把“AA Hex”写入加注字节。此值表示完全成功的真空加注过程。
如果上述过程有任何的错误，那么“00 Hex”写入加注字节，此值表示真空加注过程未完成。
博世发货状态字节是“FF Hex” 。

过程字节不正确 ⇒ 打印错误信息，退出
过程字节正确 ⇒ 继续

The process control byte identifies whether the previous on line evacuate/fill process or the off line repair bleed process has been executed correctly.
The precondition to evaluate the process control byte at the end of line tests must be that the ecacuate/fill equipment and repair bleed equipment have the capability to write the process byte.
The tester writes the process control byte after the evacuation and fill or the repair bleed process. With finishing of the ROM resident functions at the end of the fill or repair bleed cycle the tester checks the valve relay status and if the status not disabled and the evac/fill or repair bleed process has been executed correct, the tester writes the process control byte to the value “AA Hex”. This value indicates a complete successful evacuation and fills process.
If there was a problem while the evac/fill or repair bleed process and the ROM resident routine early interrupted the tester write the value “00 Hex” This value indicates filling in not complete.
If the process conclude, but there was a problem the tester write the value “EE Hex” This value indicates filling in complete and NOK.
Delivery status of the Bosch plant is “FF Hex”.

Process byte incorrect ⇒ Print out fault message , abort
Process byte correct ⇒ Continue

©博世保留商标和专利应用在内的所有权力，未经我公司许可不得复制或传递给第三方。

© All rights with Robert Bosch GmbH, including trademark / patent applications. Any right of disposal, as copying and distribution to third parties is ours.

4.4 写入变量代码（可选）Write Variant Code (Optional)

Write Variant Code (e.g. engine- and gear box variant, vehicle identification number, etc.)- optional 写入变量代码（例如发动机和变速器变量，车架号（VIN）等）– 可选	
测试设备 Tester	电子控制单元 ECU
1. 开始与 ESP ECU 建立通讯。 Start communication to ESP ECU. 2 发送安全模式要求 Send security access request 3. 开始 ESP ECU 变量代码写入。 Start of the variant code written for the ESP ECU.	1. ECU 建立通讯 ECU start communication 2 发送种子信息，检查接收到的登录密钥并开放访问权限。 ECU sends the seed, checks the received login key and allows access. 3. ECU 在 EEPROM 中储存编码数据。 ECU stores the coding data in the EEPROM.

客户可以通过发动机，变速箱等设置多种配置。
该功能并不适用于所有项目，详细内容请参考相应项目的诊断功能描述
Customer can set up some variant codes via engine, transmission and so on.
The function doesn't adapt to all the projects, details refers to relative diagnosis specification.

写入变量编码成功 ⇒ 继续下线检测流程
写入变量编码不成功 ⇒ 退出，打印错误信息并将车辆送至维修区

Coding successful ⇒ Continue
Coding not successful ⇒ Abort, print out fault message and send vehicle to repair area

©博世保留商标和专利应用在内的所有权力，未经我公司许可不得复制或传递给第三方。

© All rights with Robert Bosch GmbH, including trademark / patent applications. Any right of disposal, as copying and distribution to third parties is ours.

4.5 读取故障代码 Read Status Of DTC

读取故障代码 Read Status Of DTC	
测试设备 Tester	电子控制单元 ECU
对所有相关故障码记录进行评估 Evaluation of all relevant fault code entries	输出所有存储的故障码 Output of all stored fault codes
关于“读取故障代码”更多信息请参考客户规范文件。More information about the chapter “read status of DTC” is to be inferred from the customer specific documentations.	

备注：
ECU 输出所有故障码。数据包括几种信息，最大存储个数是 10 个，输出的故障码数量为实际存在故障码数量。
必须对输出数据进行以下评估：
- 故障码数量
- 故障码状态

轮速传感器的故障有可能在前一工位的操作中存储并以当前故障码形式存在，因此所有的轮速传感器故障（当前故障或者历史故障）在评估中均应忽略，这些故障将在下线检测轮速传感器的测试中进行检测。
测试设备应能输出故障码并报文，只有永久故障码存在才能取消测试，历史故障码应被忽略。

有当前故障码 ⇒ 打印错误信息，继续
无当前故障码 ⇒ 继续（忽略历史故障码）

Remarks:
The ECU outputs the content of the entire fault code memory. This data include several informations. The maximum number of stored faults is 10. The number of the transmitted fault codes is equal to the number of stored fault codes.
Out of the transmitted data, the following must be evaluated:
- Fault code number (DTC)
- The status of DTC

Wheel speed sensor faults that may have been stored in the ECU by previous assembly equipment will stay stored as current faults. Therefore, all wheel speed sensor (current and history) must be ignored during the evaluation. These faults will be detected in EOL test step “wheel speed sensor test”.
The tester has to evaluate the fault code data, to transform the number into a failure text and to issue a protocol.
Only permanent faults will lead to abort the test cycle. History faults must be ignored.

Current fault present ⇒ Print out fault message, continue
No current fault present ⇒ Continue (Ignore faults)

©博世保留商标和专利应用在内的所有权力，未经我公司许可不得复制或传递给第三方。

© All rights with Robert Bosch GmbH, including trademark / patent applications. Any right of disposal, as copying and distribution to third parties is ours.

4.6 清除故障代码 Clear DTC

清除故障码Clear fault code memory	
测试设备 Tester	电子控制单元 ECU
清除故障码内存 Clearing of the fault code memory	故障码内存被清除 Fault code memory is erased.
关于“清除故障码”更多信息请参考客户规范文件。More information to the chapter “Clear fault code memory ” is to be inferred from the customer specific documentations.	

根据系统调节和车辆线束的安装情况，故障代码可能在下线检测过程中已保存在电子控制单元内。
清除故障码成功 ⇒ 继续
清除故障码不成功 ⇒ 打印错误信息，继续

Depending to the adaptation onto the system and the installation of the vehicle harness, fault codes may have been stored in the ECU during the EOL process.

Clearing DTC successful ⇒ Continue
Clearing DTC not successful ⇒ Print out fault message, continue

©博世保留商标和专利应用在内的所有权力，未经我公司许可不得复制或传递给第三方。

© All rights with Robert Bosch GmbH, including trademark / patent applications. Any right of disposal, as copying and distribution to third parties is ours.

4.7 偏航率速度传感器标定（可选） YRS sensor Calibration（Optional）

偏航率传感器标定 YRS sensor Calibration		
操作者 Operator	Test rig / Tester: 试验台/测试设备	Remarks: 备注
☞ 将方向盘转至正前方位置 Turn steering wheel to straight ahead position 车辆在测试设备上应处于直行位置 Car should be positioned ahead on the equipment	Calibration of the offset values 标定传感器偏移量	The requirement of this calibration depends on the mounting tolerance of the ESP system and the used system functions (hill hold control (HHC), etc.). Details are customer specific. 标定要求取决于 ESP 系统的安装公差与系统所具备的功能（坡道驻车控制 HHC 等）。具体请参考客户规范。
关于“偏航率传感器标定”更多信息请参考客户规范文件。More information about the chapter “YRS sensor Calibration” is to be inferred from the customer specific documentations.		

备注：
安装误差过大会导致偏航率传感器无法标定，请参考章节 3.1。

Remark:
It can’t be calibrated if the installation inclination angle is too high, details please refer to chapter 3.1.

4.8 检查偏航率传感器标定结果（可选） Check YRS calibration result（Optional）

检查偏航率传感器标定结果 Check YRS calibration result	
测试设备 Tester	电子控制单元 ECU
发送查看指令 send result check routine	返回标定指令执行结果 Reply the routine run result.
关于“检查偏航率传感器标定结果”更多信息请参考客户规范文件。More information to the chapter “Check YRS calibration result” is to be inferred from the customer specific documentations.	

©博世保留商标和专利应用在内的所有权力，未经我公司许可不得复制或传递给第三方。

© All rights with Robert Bosch GmbH, including trademark / patent applications. Any right of disposal, as copying and distribution to third parties is ours.

4.9 读取偏航率传感器信号（可选） Read YRS sensor signal（Optional）

读取偏航率传感器信号 Read YRS sensor signal	
测试设备 Tester	电子控制单元 ECU
发送读取信息指令 send the signal request routine	返回偏航率信号值 Reply the signal data.
关于“读取偏航率传感器信号”更多信息请参考客户规范文件。More information to the chapter “Read YRS sensor signal” is to be inferred from the customer specific documentations.	

备注：
当传感器信号失效时会反馈0x7FFF。
该数值的要求范围：± 0.12 m/s²
精度：1LSB=0.02712 m/s²

在测试偏移量和检查故障码之前必须执行一个点火循环。
只有在检查读取了传感器偏移量，并对其进行了评估合格后才算是一个成功的标定。

标定不成功 ⇒ 错误消息，继续
标定成功 ⇒ 继续

Remark:
0x7FFF will be responded for each sensor output if the signal is invalid.
Allowed tolerance of data value: ± 0.12 m/s²
Resolution: 1LSB=0.02712 m/s²

The ignition cycle has to be executed before the test of the offset values or the check of the failure memory.
The success of the calibration has to check with reading out the offset values of the sensor and the corrected offset value should be evaluated as described above.

Calibration unsuccessful ⇒ Failure message, continue
Calibration successful ⇒ Continue

©博世保留商标和专利应用在内的所有权力，未经我公司许可不得复制或传递给第三方。

© All rights with Robert Bosch GmbH, including trademark / patent applications. Any right of disposal, as copying and distribution to third parties is ours.

4.10 方向盘转角传感器标定（可选） Steering Angle sensor Calibration（Optional）

方向盘转角传感器标定 Steering Angel Sensor Calibration	
Operator: 操作者	Test rig / Tester: 试验台/测试设备
☞ Turn the steering wheel to straight ahead position 将方向盘转至正前方位置 SAS calibration tolerance measured at the steering wheel: ≤ ± A_2 方向盘处测得的 SAS 标定公差：≤ ± A_2	Calibration (zeroing of the offset) of the steering angle sensor 方向盘转角传感器标定（偏移量调零）
关于“读取故障代码”更多信息请参考客户规范文件。More information about the chapter “read status of DTC” is to be inferred from the customer specific documentations.	

Parameter: 参数

Kind of parameters:	Parameter name:	Unit:	Physical value:
Condition	SAS 标定公差 W_2 SAS calibration tolerance W_2	Degrees (°)	5
Time	标定时间 t_{Cal_SAS} Calibration time t_{Cal_SAS}	Milliseconds(ms)	≤ 1500

方向盘转角传感器的标定要求取决于所用硬件（客户指定）。
The requirement to calibrate the steering angle sensor depends on the used hardware (customer specific)!

关于“方向盘转角传感器（SAS）标定 - 可选”更多信息请参考客户规范文件。
More details to the chapter “Calibration of the steering angle sensor (SAS) - optional” can be read in the customer specific documentations.

SAS 标定成功 ⇒ 继续下线检测流程
SAS 标定不成功 ⇒ 退出，打印错误信息并将车辆送至维修区

SAS calibration successful ⇒ Continue
SAS calibration not successful ⇒ Abort, print out fault message and send vehicle to repair area

©博世保留商标和专利应用在内的所有权力，未经我公司许可不得复制或传递给第三方。

© All rights with Robert Bosch GmbH, including trademark / patent applications. Any right of disposal, as copying and distribution to third parties is ours.

4.11 转向角传感器标定结果（可选） Check SAS calibration result（Optional）

转向角传感器标定结果 Check SAS calibration result	
测试设备 Tester	电子控制单元 ECU
发送查看指令 send result check routine	返回标定指令执行结果 Reply the routine run result.
关于“转向角传感器标定结果”更多信息请参考客户规范文件。More information to the chapter “Check SAS calibration result” is to be inferred from the customer specific documentations.	

4.12 踏板行程传感器标定（可选） Pedal travel sensor Calibration（Optional）

踏板行程传感器标定 Pedal Travel Sensor Calibration	
Operator: 操作者	Test rig / Tester: 试验台/测试设备
不允许踩制动踏板! **The brake pedal must not be applied!**	1 读取当前实际踏板行程 （≤ PTS 标定误差 S1） Read actual Pedal travel (≤PTS calibration tolerance S1) 2 标定 PTS Calibrate PTS 3 读取当前踏板行程（PTS 标定误差 S2） Read actual Pedal travel (≤PTS calibration tolerance S1)
	关于“读取故障代码”更多信息请参考客户规范文件。More information about the chapter “read status of DTC” is to be inferred from the customer specific documentations.

Parameter: 参数

Kind of parameters:	Parameter name:	Unit:	Physical value:
Condition	PTS 标定公差 S1 PTS calibration tolerance S1	毫米（mm） Millimeter （mm）	≤ 11
	PTS 标定公差 S2 PTS calibration tolerance S2		± 0,5
Time	标定时间 t_{Cal_PTS} Calibration time t_{Cal_PTS}	Milliseconds(ms)	≤ 5000

©博世保留商标和专利应用在内的所有权力，未经我公司许可不得复制或传递给第三方。

© All rights with Robert Bosch GmbH, including trademark / patent applications. Any right of disposal, as copying and distribution to third parties is ours.

备注 Remarks:

PTS 的标定可以在生产线标定工位进行。
The calibration of the PTS can also take place in a preceding production step.

标定一定要严格按照以下步骤：
The following Steps have to be abided exactly:

1 不能踩制动踏板。（标定前）踏板行程最大允许值：≤ ± S1 （通过读取当前踏板行程值来确认），并且在整个标定时间段内要位置这种情况。
Brake pedal not applied. Maximal permitted Pedal travel: ≤ ± S1 (protected by reading the actual Pedal travel).This condition must be abided for the whole Calibration time tcal_PTS.

2 通过诊断功能发送 PTS 标定指令。
Execute the Calibration of the PTS with the Diagnostic function。

3 PTS 标定之后，通过评估踏板行程值来验证标定结果。在整个标定完成之前，如果发现标定不成功，标定应该
重复一次。
Verify the calibration with evaluating of the Pedal travel after the Calibration. With a not successful calibration of the PTS, the calibration should be repeated again, before the whole process will be aborted.

PTS 标定成功 ⇒ 继续下线检测流程
PTS 标定不成功 ⇒ 退出，打印错误信息并将车辆送至维修区

PTS calibration successful ⇒ Continue
PTS calibration not successful ⇒ Abort, print out fault message and send vehicle to repair area

4.13 踏板行程传感器标定结果（可选） Check PTS calibration result （Optional）

踏板行程传感器标定结果 Check PTS calibration result	
测试设备 Tester	电子控制单元 ECU
发送查看指令 send result check routine	返回标定指令执行结果 Reply the routine run result.
关于“踏板行程传感器标定结果”更多信息请参考客户规范文件。More information to the chapter “Check PTS calibration result” is to be inferred from the customer specific documentations.	

©博世保留商标和专利应用在内的所有权力，未经我公司许可不得复制或传递给第三方。

© All rights with Robert Bosch GmbH, including trademark / patent applications. Any right of disposal, as copying and distribution to third parties is ours.

4.14 胎压复位（可选） iTPMS reset （Optional）

胎压复位 iTPMS reset	
测试设备 Tester	电子控制单元 ECU
1. 车辆上电3秒后 After ignition On 3 seconds 2. 车辆速度小于3.6km/h vehicle speed no more than 3.6km/h	发送胎压复位指令 Send iTPMS reset routine
关于“胎压复位”更多信息请参考客户规范文件。More information to the chapter “iTPMS reset” is to be inferred from the customer specific documentations.	

备注：
该功能的实施必须满足以下条件：
1 所有轮速传感器和车轮需安装完毕且正常
2 车辆上电 3 秒以后
3 复位时车速必须小于 3.6Km/h
特殊备注：
在测试设备收到此服务的肯定回复后，至少需要 2 秒才能完成所有复位，此期间不能断电。

胎压复位成功 ⇒ 继续下线检测流
胎压复位不成功 ⇒ 退出，打印错误信息并将车辆送至维修区

Remarks:
1 All the wheel speed sensor and final wheels should be mounted and working well.
2 After ignition ON 3 seconds.
3 Vehicle speed no more than 3.6Km/h during reset.
Special remark:
After tester receives positive response of iTPMS reset, there will still take at least 2s until all of reset finished.

Reset unsuccessful ⇒ Failure message, continue
Reset successful ⇒ Continue

4.15 检查胎压复位状态（可选） Request iTPMS reset result（Optional）

胎压复位状态验证 Request iTPMS reset result	
测试设备 Tester	电子控制单元 ECU
发送查看指令 send result check routine	返回标定指令执行结果 Reply the routine run result.
关于“检查胎压复位结果”更多信息请参考客户规范文件。More information to the chapter “Check iTPMS reset result” is to be inferred from the customer specific documentations.	

©博世保留商标和专利应用在内的所有权力，未经我公司许可不得复制或传递给第三方。

© All rights with Robert Bosch GmbH, including trademark / patent applications. Any right of disposal, as copying and distribution to third parties is ours.

4.16 禁用速度限制和阀组继电器关闭 Speed limit and Valve relay shut down deactivation

禁用速度限制和阀组继电器关闭 Speed limit and Valve relay shut down deactivation	
测试设备 Tester	电子控制单元 ECU
2. 禁用速度限制 Speed limit deactivation 2. 禁用阀组继电器关闭 Valve relay shut down deactivation	1. 开始持续速度限制功能 Start permanent control speed limit function 2. 开始持续阀组继电器关闭功能 Start permanent control valve relay shut down function
关于“禁用速度限制和阀组继电器关闭”更多信息请参考客户规范文件。More information to the chapter “Speed limit and Valve relay shut down deactivation” is to be inferred from the customer specific documentations.	

如果进入高速转毂动态测试（速度>10kph），请使用本服务指令确保速度限制已被禁用。

控制成功 ⇒ 继续下线检测流程
控制不成功 ⇒ 退出，打印错误信息并将车辆送至维修区

If EOL test was carried out on high speed roll (speed>10kph) ,please apply this service to verify speed limit deactivated.

Start permanent control successful ⇒ Continue
Start permanent control not successful ⇒ Abort, print out fault message and send vehicle to repair area

©博世保留商标和专利应用在内的所有权力，未经我公司许可不得复制或传递给第三方。

© All rights with Robert Bosch GmbH, including trademark / patent applications. Any right of disposal, as copying and distribution to third parties is ours.

4.17 开始轮速传感器测试 Start WSS Test

开始轮速传感器测试 Start WSS test	
测试设备 Tester	电子控制单元 ECU
1. 转毂带动车轮转动 Roller dynamometer run wheels 2. 开始轮速传感器测试 Start WSS test	记录传感器测试过程中每个车轮的轮速信号 Record WSS signal of every wheel during WSS test
关于“开始轮速传感器测试 ”更多信息请参考客户规范文件。More information to the chapter “Start WSS test” is to be inferred from the customer specific documentations.	

轮速传感器测试可以检查轮速传感器的相关性，防止轮速传感器的错装。
轮速传感器测试可以检查轮速传感器的信号质量，保证轮速传感器能够正常的工作。
轮速传感器测试时间必须大于单个轮子转动一周的时间。
具体的轮速传感器的测试方法请参考章节 3.5。

WSS test can check WSS relativity to avoid wss assembled unsiutedly.
WSS test can check WSS signal quality to ensure WSS can work normally.
WSS test execution time must be longer than one tire’s full round rolling spend time .
Detail WSS test methods refer to chapter 3.5.

©博世保留商标和专利应用在内的所有权力，未经我公司许可不得复制或传递给第三方。

© All rights with Robert Bosch GmbH, including trademark / patent applications. Any right of disposal, as copying and distribution to third parties is ours.

4.18 评估轮速传感器测试 Evaluation of WSS Test

评估轮速传感器测试 Evaluation of WSS test	
测试设备 Tester	电子控制单元 ECU
评估轮速传感器测试 Evaluation of WSS test	输出轮速传感器测试过程中每个车轮轮速的最大值和最小值 Output of the max value and min value of every wheel during WSS test
关于“评估轮速传感器测试”更多信息请参考客户规范文件。More information to the chapter “Evaluation of WSS test” is to be inferred from the customer specific documentations.	

轮速传感器测试要求车轮至少转动一周。
下线检测设备必须拿轮速传感器测试结果与转毂速度和允许误差进行评估：

轮速不合格 ⇒ 取消测试
轮速合格 ⇒ 继续

WSS data is only sent if the “Routine Status = Routine finished”.
The test should be done during at least one complete wheel rotation.
EOL test equipment should evaluate the WSS test result with the tolerance and roller speed.

WSS result ineligible ⇒ Abort Test
WSS result eligible ⇒ Continue

©博世保留商标和专利应用在内的所有权力，未经我公司许可不得复制或传递给第三方。

© All rights with Robert Bosch GmbH, including trademark / patent applications. Any right of disposal, as copying and distribution to third parties is ours.

4.19 ESP 动态测试 ESP Dynamic Test

ESP动态测试 ESP dynamic test	
测试设备和操作 Tester and operate:	电子控制单元 ECU
四轮转毂设备 four-wheel roller 测试过程中不要踩制动踏板 Brake pedal should not applied during test. 发送动态测试指令 Send dynamic test routine	执行动态测试指令 Execute the dynamic test routine.
关于“动态测试”更多信息请参考客户规范文件。More information to the chapter “Dynamic test” is to be inferred from the customer specific documentations.	

时间设置必须根据不同的测试设备和车型来决定！所有博世推荐的时间值必须通过试验来确定，该试验由客户来完成。

The timings must be individually suited per the dynamic behavior of the vehicle on the test rig! All proposed times are recommended values by Bosch and must be confirmed by trials. These trials must be done by the customer.

重要的备注

所有 ESP® 9 系统的导向阀没有压力限制。在该系统中压力限制是通过控制 USV 阀的电流最大 1.24A 来实现的。该电流对应的系统压力在 180-220 bar 之间。在降低 USV 驱动负载的同时也可以降低系统压力。在高压时 ESP® 的极限测试时间必须<20 秒，否则的话 ECU 将可能由于过热而损坏。
例如在诊断过程时的驱动值设为 40%（00 28H），其对应的系统压力在 110 到 150 bar 左右。该压力绝对可以达到足够的制动力用于测试。

*** Important remarks:**

At system ESP® 9 a pilot valve without pressure limitation is used. At this system the pressure is limited by controlling of the USV valve current to max. 1,24A. This current corresponds a system pressure between 180-220 bar. With reducing of the duty cycle of the USV actuation, it is possible to reduce the system pressure, too. With this high pressure the max. test time at the ESP® test must be < 20 sec., otherwise the ECU could be damaged by overheating.
With reducing the actuation in diagnosis example 40% (00 28H), corresponds a system pressure of approx. 110 to 150bar. This pressure is absolute enough to reach a sufficient brake force.

©博世保留商标和专利应用在内的所有权力，未经我公司许可不得复制或传递给第三方。

© All rights with Robert Bosch GmbH, including trademark / patent applications. Any right of disposal, as copying and distribution to third parties is ours.

4.20 写入下线检测过程控制字节 Write EOL Test Process Control Byte

写入下线检测过程控制字节 Write EOL process Control byte	
测试设备 Tester	电子控制单元 ECU
写入下线检测过程控制字节 Write EOL process Control byte	将下线检测过程结果写入 ESP 系统的 EEPROM Writes the process results into the EEPROM of the ESP system
关于“写入过程字节”更多信息请参考客户诊断功能描述。More information to the chapter “Write process bytes” is to be inferred from the customer specific documentations.	

博世交付的产品预写入值为 FFH Bosch delivery state is FFH.
电子控制单元用预定义的程序字节“FF 十六进制”送到客户的装配线。该号码被博世保留，以防一个不成功的通讯该数据将还保留在电子控制单元的电可擦除可编程只读存储器中。
在成功的下线检测的情形下，将写入客户定义的数值，该数值应得到测试软件的校验。

写入字节成功 ⇒ 继续
写入字节不成功 ⇒ 打印错误信息，继续

The ECU is shipped to the customers’ assembly line with a predefined process byte: “FF Hex”. In case of a non successful communication this data will still stay in the EEPROM of the ECU (“incorrect“).
In case of a successful EOL process the value will be changed in a defined value of the customer. The ECU data must be verified with the limit data of the tester software.

Write process bytes ok ⇒ Continue
Write process bytes nok. ⇒ Print out fault message, continue

4.21 激活速度限制和阀组继电器关闭 Speed limit and Valve relay shut down activation

激活速度限制和阀组继电器关闭 Speed limit and Valve relay shut down activation	
测试设备 Tester	电子控制单元 ECU
1. 激活速度限制 Speed limit activation 2. 激活阀组继电器关闭 Valve relay shut down activation	1. 停止控制速度限制功能 Stop control speed limit function 2. 停止控制阀组继电器关闭功能 Stop control valve relay shut down function
关于“激活速度限制和阀组继电器关闭”更多信息请参考客户规范文件。More information to the chapter “Speed limit and Valve relay shut down activation” is to be inferred from the customer specific documentations.	

©博世保留商标和专利应用在内的所有权力，未经我公司许可不得复制或传递给第三方。

© All rights with Robert Bosch GmbH, including trademark / patent applications. Any right of disposal, as copying and distribution to third parties is ours.

完成动态测试后，应激活速度限制和阀组继电器关闭的功能，使 ESP 件恢复默认状态。
除通过命令来激活速度限制和阀组继电器关闭功能外，该步骤还可以通过复位点火开关来实现。

停止控制成功 ⇒ 继续下线检测流程
停止控制不成功 ⇒ 打印错误信息，继续

After dynamic test, should make speed limit and valve relay shut down activation to make ESP come back to default status.
Operatoer can send commands to realize the function of Speed limit and valve relay shut down activation, besides it also can be realized by reset ignition switch.

Stop control successful ⇒ Continue
Stop control not successful ⇒ Print out fault message, continue

4.22 进入安全模式 Security Access

进入安全模式 Security Access	
测试设备 Tester	电子控制单元 ECU
申请种子 Request Seed	发送种子 Send Seed
将种子换算成密钥，并发送密钥 transform seed into key, send key	进入安全模式 enter security unlocked mode
关于“进入安全模式”更多信息请参考客户规范文件。More information to the chapter “Security Access” is to be inferred from the customer specific documentations.	

部分诊断功能是需要在安全模式下执行的，具体详见相应项目的诊断功能描述文件。
进入安全模式分为以下几步：
对 ECU 发送指令获得种子 → 通过算法将种子换算成密钥 → 将密钥发送至 ECU → 进入安全模式
种子与密钥的换算方法详见相应项目的安全算法文件。

Some diagnosis function command must be run in security unlocked mode, details refer to relative “Functional Description of Diagnosis”.
Security access need the following steps:
Request seed → transform seed into key → send key to ECU → enter security unlocked mode
The method of transforming seed into key refers to relative security access file for relative project.

©博世保留商标和专利应用在内的所有权力，未经我公司许可不得复制或传递给第三方。

© All rights with Robert Bosch GmbH, including trademark / patent applications. Any right of disposal, as copying and distribution to third parties is ours.

4.23 结束扩展诊断模式 End of Extended Diagnosis Session

结束扩展诊断模式 End of Extended Diagnosis Session	
测试设备 Tester	电子控制单元 ECU
退出客户指定诊断模式 Leaving of the customer specific diagnostic mode.	退出客户指定诊断模式 Leaves the customer specific diagnostic mode.
关于“结束扩展诊断模式”更多信息请参考客户规范文件。More information to the chapter “End of Extended Diagnosis Session” is to be inferred from the customer specific documentations.	

ESP 结束扩展诊断模式，ESP 报警灯熄灭。在下线检测结束时，操作人员应观察 ESP 报警灯状态是否正常。

When ESP exit extended diagnostic session, ESP warning light will be turn off. At the end of EOL test, operator should observe the ESP warning light to judge whether the warning light status is right or not.

©博世保留商标和专利应用在内的所有权力，未经我公司许可不得复制或传递给第三方。

© All rights with Robert Bosch GmbH, including trademark / patent applications. Any right of disposal, as copying and distribution to third parties is ours.

5 阀保护措施和液压数据 Valve protective measures and hydraulic data

	ESP®
Valve coil:	EOL Diagnostic mode
EV 7,3 Ω	Up/down counter with a ratio up/down = 2/1; Actuation time limited to **120s**
AV 7,3 Ω	Up/down counter with a ratio up/down = 2/1; Actuation time limited to **30s**
HSV 3,6 Ω	20ms 100% duty cycle, then lowering of duty cycle to 55%
USV 7,3 Ω	Max. duty cycle is limited to max. I = 0,73 A (~ 110 ± 20 bar at active pressure increase)

备注：
在诊断模式下，所有阀保护措施都被激活，无法关闭。
Remarks:
All valve protection measurements are active in the diagnostic mode. These measurements can not be switched off.

©博世保留商标和专利应用在内的所有权力，未经我公司许可不得复制或传递给第三方。

© All rights with Robert Bosch GmbH, including trademark / patent applications. Any right of disposal, as copying and distribution to third parties is ours.

Gen 9: Valve protection measure: Up/down counter with a ratio of = 2/1

Example: Outlet valve with a maximum limitation to 30 seconds

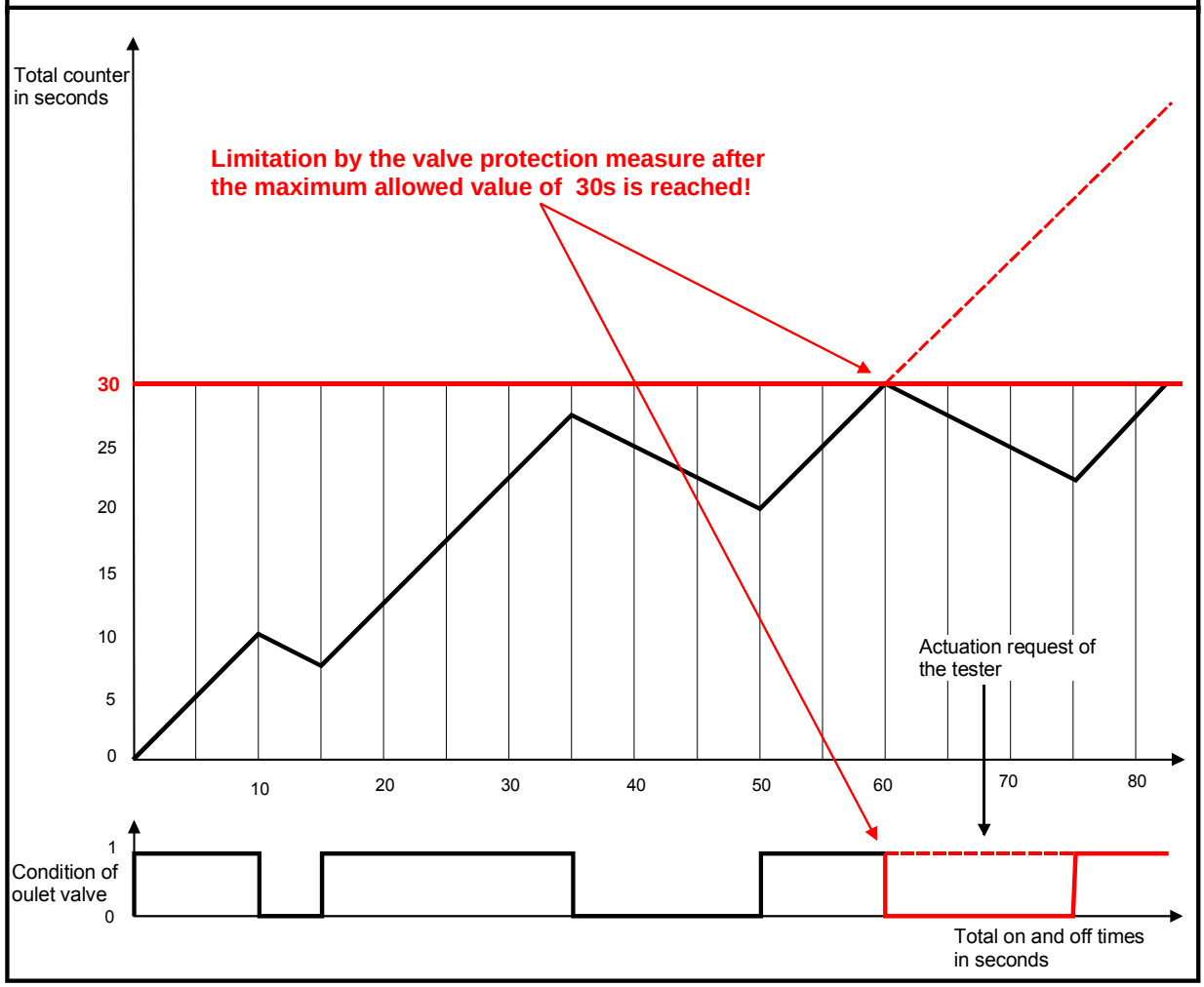

备注：
阀保护措施强制保护阀电磁线圈与 ECU 免于过热。冷却时间足够后阀组方能再度启动。当系统重新启动以后阀保护措施会根据电磁阀线圈的阻值来计算是否需要冷却时间来启动阀。即便是阀保护措施也无法保证阀电磁线圈和 ECU100%安全。因此，客户有责任确保阀启动序列正确！

Remarks:
The forced limitation by the valve protection measure is active as long as valve coils and the ECU are sufficient protected against damages caused by overheating. Only after an appropriate cooling time the valves can be activated again.
To guarantee a sufficient cooling time also after restart of the system (e.g. ignition cycle) the provided coil resistance values are evaluated by the valve protection measure. The resistance the coils are measured after each system power up and then cyclic all 20 seconds. These values are used to initialize the up and down counter

©博世保留商标和专利应用在内的所有权力，未经我公司许可不得复制或传递给第三方。

© All rights with Robert Bosch GmbH, including trademark / patent applications. Any right of disposal, as copying and distribution to third parties is ours.

value for the EV and AV coils. Caused by different reasons the described valve protection measurements cannot protect the valve coils and the ECU with 100% safeness. That's the reason why the customer is responsible to ensure a correct valve activation sequence!

©博世保留商标和专利应用在内的所有权力，未经我公司许可不得复制或传递给第三方。

© All rights with Robert Bosch GmbH, including trademark / patent applications. Any right of disposal, as copying and distribution to third parties is ours.

6 设备要求 Equipment Requirement

测功机设计：
该测试可在 4 个独立的转毂上进行。
Dynamometer design:
The test is designed to be performed on a roller dynamometer.
To allow individual wheel test cycles the rolls of each wheel should be independently driven by the test rig drives.

诊断信息：
诊断电脑和车辆应尽可能的接近，以避免出现任何通讯故障。
为了减少测试时间，消息之间以及消息内部字节之间的时间间隔应尽可能地接近最小可能值。
所有其他的诊断信息和功能都需根据客户要求决定。
Diagnostic Information:
The diagnostic computer should be as close as possible near the vehicle to avoid communication problems.
The timing (time gaps between messages and bytes within messages) should be set close to the minimum possible limits in order to reduce the test time.
All other additional diagnostic information and functions is customer specific.

标志字节：
抽真空加注的标志字节必须有客户或其抽真空加注/人工排气设备的供应商确定。
Process Byte:
The final definition of the process byte data must be taken from the supplier of the evac/fill- and repair bleed equipment or the customer.

轮速传感器测试：
在检查轮速传感器相关性时，如果有可能，通过设置不同的时间延迟使每个车轮在不同的时间开始转动。
Wheel Speed Sensor Test:
The correlation check is executed by starting the individual rolls with a delay between each wheel if possible.

阀动态测试：
为了最小化整个测试时间，减压/增压循环可以重叠。
Dynamic Valve Tests:
To minimize the entire test time, the pressure release / increase cycles can be overlapped.

编辑菜单：
在生产过程中，由于软件的升级，可能需要修改 ECU 的识别码，所以编辑菜单的设置对于修改识别码非常重要。
阀的动态测试时间设置必须通过试验尝试确定。
阀的动作循环时间设置，例如执行时间和稳定时间，必须包含在编辑菜单中。
为了简单的修改，编辑菜单中同样需要包含待评估数据的上、下限值。
Editor menus:
ECU Identification codes may change during production due to updates of software revisions.
It is important to set up the software program to modify identification numbers easily by using an editor menu.
The timing of the dynamic valve test must be found during test trials.
Timing of valve actuation cycles, such as actuation times and stabilization times should be included in an editor menu.
Upper and lower limit values for evaluation should also be included in an editor menu for simple adaptation or modifications.

©博世保留商标和专利应用在内的所有权力，未经我公司许可不得复制或传递给第三方。

© All rights with Robert Bosch GmbH, including trademark / patent applications. Any right of disposal, as copying and distribution to third parties is ours.

车辆型号（车重，长短轴局，车身型号）：
由于存在各种不同型号和结构的车辆，在 ESP 动态测试的电磁阀工作循环过程中，可能需要不同的执行次数。这些数据必须存在测试设备的单独参数文件中，并且易于通过编辑菜单修改。当进入测试设备时，应该通过条形码或者操作者的选择完成车辆型号的选择。
Vehicle Types (weight, long wheel base, short wheel base, body type):
Due to the various vehicle types and configurations, different actuation times for the valves cycles of the dynamic ESP test might be required. These data should be available in separate parameter file within the test equipment software and also easily be modified by using an editor menu.
The selection of the vehicle type should be done by either a bar code reading or an operator selection when driving into the test rig.

测试协议：
如果实验结果正确，打印“测试通过”。
如果测试结果不良，必须打印失败结果。
失败结果必须包括测试失败步骤的所有测试数据以便于原因分析。
必须按要求提供所有实验结果的测试协议。
Test protocol:
In case of an OK test result, a print out (”test passed”) is made.
In case of a NOK test result, a failure protocol must be printed out.
This protocol must include all test data of the test step that failed in order to allow a better failure analysis.
An entire test protocol of all test results must be available on request.

车辆状态：
为了向系统充分供电，蓄电池必须完全充电。为了保持供电正常，发动机可保持工作。
Vehicle conditions:
The battery must be charged properly in order to allow a sufficient power supply to the system.
The engine can be running in order to apply a sufficient power supply.

©博世保留商标和专利应用在内的所有权力，未经我公司许可不得复制或传递给第三方。

© All rights with Robert Bosch GmbH, including trademark / patent applications. Any right of disposal, as copying and distribution to third parties is ours.